CY8CKIT-059

PSoC® 5LP Prototyping Kit Guide

Doc. #: 001-96498 Rev. *G

Cypress Semiconductor
198 Champion Court
San Jose, CA 95134-1709
www.cypress.com

Copyrights

© Cypress Semiconductor Corporation, 2015-2018. This document is the property of Cypress Semiconductor Corporation and its subsidiaries, including Spansion LLC ("Cypress"). This document, including any software or firmware included or referenced in this document ("Software"), is owned by Cypress under the intellectual property laws and treaties of the United States and other countries worldwide. Cypress reserves all rights under such laws and treaties and does not, except as specifically stated in this paragraph, grant any license under its patents, copyrights, trademarks, or other intellectual property rights. If the Software is not accompanied by a license agreement and you do not otherwise have a written agreement with Cypress governing the use of the Software, then Cypress hereby grants you a personal, non-exclusive, nontransferable license (without the right to sublicense) (1) under its copyright rights in the Software (a) for Software provided in source code form, to modify and reproduce the Software solely for use with Cypress hardware products, only internally within your organization, and (b) to distribute the Software in binary code form externally to end users (either directly or indirectly through resellers and distributors), solely for use on Cypress hardware product units, and (2) under those claims of Cypress's patents that are infringed by the Software (as provided by Cypress, unmodified) to make, use, distribute, and import the Software solely for use with Cypress hardware products. Any other use, reproduction, modification, translation, or compilation of the Software is prohibited.

TO THE EXTENT PERMITTED BY APPLICABLE LAW, CYPRESS MAKES NO WARRANTY OF ANY KIND, EXPRESS OR IMPLIED, WITH REGARD TO THIS DOCUMENT OR ANY SOFTWARE OR ACCOMPANYING HARDWARE, INCLUDING, BUT NOT LIMITED TO, THE IMPLIED WARRANTIES OF MERCHANTABILITY AND FITNESS FOR A PARTICULAR PURPOSE. No computing device can be absolutely secure. Therefore, despite security measures implemented in Cypress hardware or software products, Cypress does not assume any liability arising out of any security breach, such as unauthorized access to or use of a Cypress product. In addition, the products described in these materials may contain design defects or errors known as errata which may cause the product to deviate from published specifications. To the extent permitted by applicable law, Cypress reserves the right to make changes to this document without further notice. Cypress does not assume any liability arising out of the application or use of any product or circuit described in this document. Any information provided in this document, including any sample design information or programming code, is provided only for reference purposes. It is the responsibility of the user of this document to properly design, program, and test the functionality and safety of any application made of this information and any resulting product. Cypress products are not designed, intended, or authorized for use as critical components in systems designed or intended for the operation of weapons, weapons systems, nuclear installations, life-support devices or systems, other medical devices or systems (including resuscitation equipment and surgical implants), pollution control or hazardous substances management, or other uses where the failure of the device or system could cause personal injury, death, or property damage ("Unintended Uses"). A critical component is any component of a device or system whose failure to perform can be reasonably expected to cause the failure of the device or system, or to affect its safety or effectiveness. Cypress is not liable, in whole or in part, and you shall and hereby do release Cypress from any claim, damage, or other liability arising from or related to all Unintended Uses of Cypress products. You shall indemnify and hold Cypress harmless from and against all claims, costs, damages, and other liabilities, including claims for personal injury or death, arising from or related to any Unintended Uses of Cypress products.

Cypress, the Cypress logo, Spansion, the Spansion logo, and combinations thereof, WICED, PSoC, CapSense, EZ-USB, F-RAM, and Traveo are trademarks or registered trademarks of Cypress in the United States and other countries. For a more complete list of Cypress trademarks, visit cypress.com. Other names and brands may be claimed as property of their respective owners.

Contents

Safety Information **5**

1. Introduction **7**

1.1 Kit Contents 7
1.2 PSoC Creator 8
1.2.1 PSoC Creator Code Examples 9
1.2.2 Kit Code Examples....10
1.2.3 PSoC Creator Help 10
1.2.4 Component Datasheets 11
1.3 Getting Started....11
1.4 Additional Learning Resources....11
1.5 Technical Support....12
1.6 Document Conventions 12

2. Software Installation **13**

2.1 Before You Begin....13
2.2 Install Software 13
2.3 Uninstall Software....15

3. Kit Operation **16**

3.1 Theory of Operation....16
3.2 KitProg 17
3.3 Programming and Debugging the PSoC 5LP Target Device....17
3.3.1 Programming using PSoC Creator....17
3.3.2 Debugging using PSoC Creator....19
3.3.3 Programming using PSoC Programmer....19
3.4 USB-UART Bridge 19
3.5 USB-I2C Bridge 19
3.6 Updating KitProg Firmware....19

4. Hardware **20**

4.1 Board Details 20
4.2 Hardware Details 21
4.2.1 Target Board....21
4.2.2 KitProg Board....22
4.2.3 Power Supply System 23
4.2.4 Board Separation (Snapping)....24
4.2.5 Header Connections 24
4.2.6 User and Passive Inputs 28

5. Code Examples **31**

5.1 Using the Kit Code Examples 31
5.2 CE195352_PSoC_5LP_Blinking_LED 35
5.3 CE195277_ADC_and_UART 37
5.4 CE195394_HID_Mouse 38

Appendix 39

PSoC 5LP Prototyping Kit Schematics 39
Programming PSoC 5LP Prototyping Kit Using MiniProg3/KitProg 41
Bill of Materials 42

Revision History **45**

Safety Information

Regulatory Compliance

The CY8CKIT-059 PSoC® 5LP Prototyping Kit is intended for use as a development platform for hardware or software in a laboratory environment. The board is an open system design, which does not include a shielded enclosure. This may cause interference to other electrical or electronic devices in close proximity. In a domestic environment, this product may cause radio interference. In such cases, you may be required to take adequate preventive measures. In addition, this board should not be used near any medical equipment or RF devices.

Attaching additional wiring to this product or modifying the product operation from the factory default may affect its performance and cause interference with other apparatus in the immediate vicinity. If such interference is detected, suitable mitigating measures should be taken.

The PSoC 5LP Prototyping Kit, as shipped from the factory, has been verified to meet with requirements of CE as a Class A product.

The PSoC 5LP Prototyping Kit contains electrostatic discharge (ESD) sensitive devices. Electrostatic charges readily accumulate on the human body and any equipment, and can discharge without detection. Permanent damage may occur on devices subjected to high-energy discharges. Proper ESD precautions are recommended to avoid performance degradation or loss of functionality. Store unused PSoC 5LP Prototyping Kit boards in the protective shipping package.

End-of-Life/Product Recycling

This kit has an end-of life five years from the date of manufacture mentioned on the back of the box. Contact your nearest recycler for discarding the kit.

General Safety Instructions

ESD Protection

ESD can damage boards and associated components. Cypress recommends that you perform procedures only at an ESD workstation. If such a workstation is not available, use appropriate ESD protection by wearing an antistatic wrist strap attached to the chassis ground (any unpainted metal surface) on your board when handling parts.

Handling Boards

PSoC 5LP Prototyping Kit boards are sensitive to ESD. Hold the board only by its edges. After removing the board from its box, place it on a grounded, static-free surface. Use a conductive foam pad if available. Do not slide board over any surface.

1. Introduction

Thank you for your interest in the CY8CKIT-059 PSoC 5LP Prototyping Kit. This kit is designed as an easy-to-use and inexpensive prototyping platform. The PSoC 5LP Prototyping Kit supports the PSoC 5LP device family, delivering a complete system solution for a wide range of embedded applications at a very low cost. The PSoC 5LP is the industry's most integrated SoC with an Arm® Cortex™-M3 CPU. It combines programmable and reconfigurable high-precision analog and digital blocks with flexible automatic routing. The unique flexibility of the PSoC 5LP architecture will help those who want to rapidly develop products using the PSoC 5LP device family.

The PSoC 5LP Prototyping Kit offers an open footprint breakout board to maximize the end-utility of the PSoC 5LP device. This kit provides a low-cost alternative to device samples while providing a platform to easily develop and integrate the PSoC 5LP device into your end-system. In addition, the board includes the following features:

- Micro-USB connector to enable USB application development
- Onboard CMOD capacitors to enable CapSense® development
- Bypass capacitors to ensure the high-quality ADC conversions
- An LED to provide feedback
- A push button to provide a simple user input
- Load capacitors to connect 32-kHz external crystal oscillator
- 3.3-V to 5.5-V operation

The PSoC 5LP prototyping kit also integrates the Cypress KitProg that enables onboard programming, debugging, and bridging functionality, such as USB-UART and USB-I2C. The KitProg is used to program and debug the target PSoC 5LP device (see Figure 1-1). The prototyping kit allows you to separate the KitProg board from the PSoC 5LP target board.

1.1 Kit Contents

This kit contains only the PSoC 5LP Prototyping Kit board.

Figure 1-1. CY8CKIT-059 PSoC 5LP Prototyping Kit

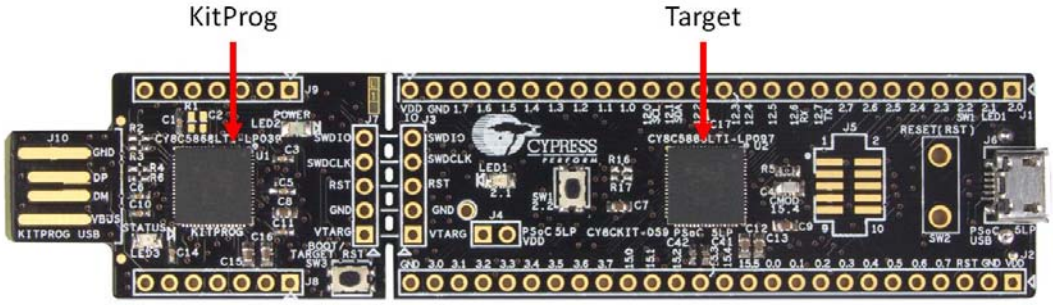

1.2 PSoC Creator

PSoC Creator™ is a state-of-the-art, easy-to-use integrated design environment (IDE). It introduces revolutionary hardware and software co-design, powered by a library of pre-verified and pre-characterized PSoC Components. With PSoC Creator, you can:

1. Drag and drop Components to build your hardware system design in the main design workspace
2. Codesign your application firmware with the PSoC hardware
3. Configure Components using configuration tools
4. Explore the library of 100+ Components
5. Review Component datasheets

Figure 1-2. PSoC Creator Features

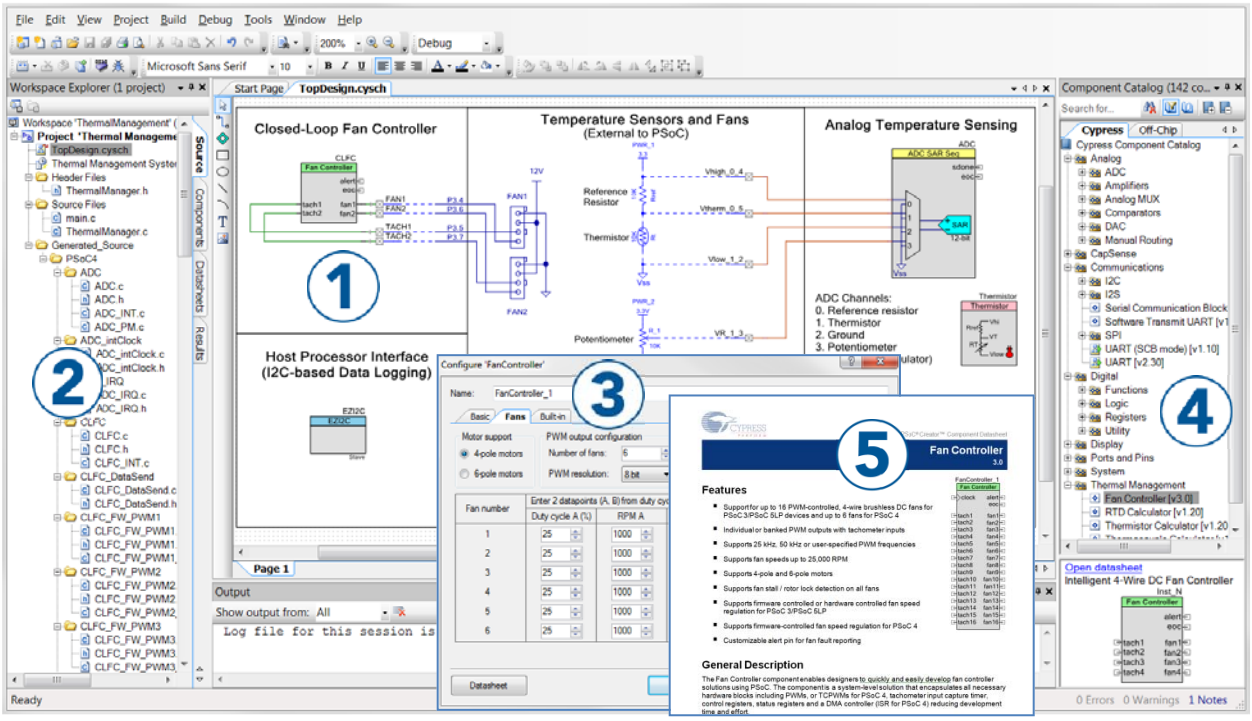

PSoC Creator also enables you to tap into an entire tool ecosystem with integrated compiler chains and production programming programmers for PSoC devices.

For more information, visit www.cypress.com/psoccreator.

1.2.1 PSoC Creator Code Examples

PSoC Creator includes a large number of code examples. These examples are available from the PSoC Creator Start Page, as Figure 1-3 on page 9 shows.

Code examples can speed up your design process by starting you off with a complete design, instead of a blank page. They also show how PSoC Creator Components can be used for various applications. Code examples and documentation are included, as shown in Figure 1-4 on page 10.

In the **Find Example Project** dialog shown in Figure 1-4, you have several options:

- Filter for examples based on architecture or device family, that is, PSoC 3, PSoC 4, or PSoC 5LP; project name; or keyword.
- Select from the menu of examples offered based on the **Filter Options**.
- Review the example project's description (on the **Documentation** tab).
- Review the code from the **Sample Code** tab. You can copy the code from this window and paste to your project, which can help speed up code development.
- Create a new project (and a new workspace if needed) based on the selection. This can speed up your design process by starting you off with a complete, basic design. You can then adapt that design to your application.

Figure 1-3. Code Examples in PSoC Creator

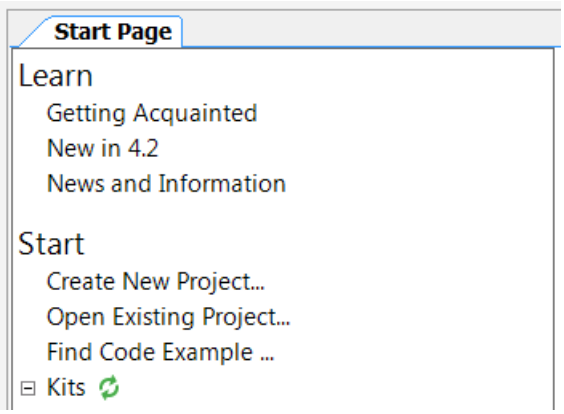

Figure 1-4. Code Example Projects with Sample Code

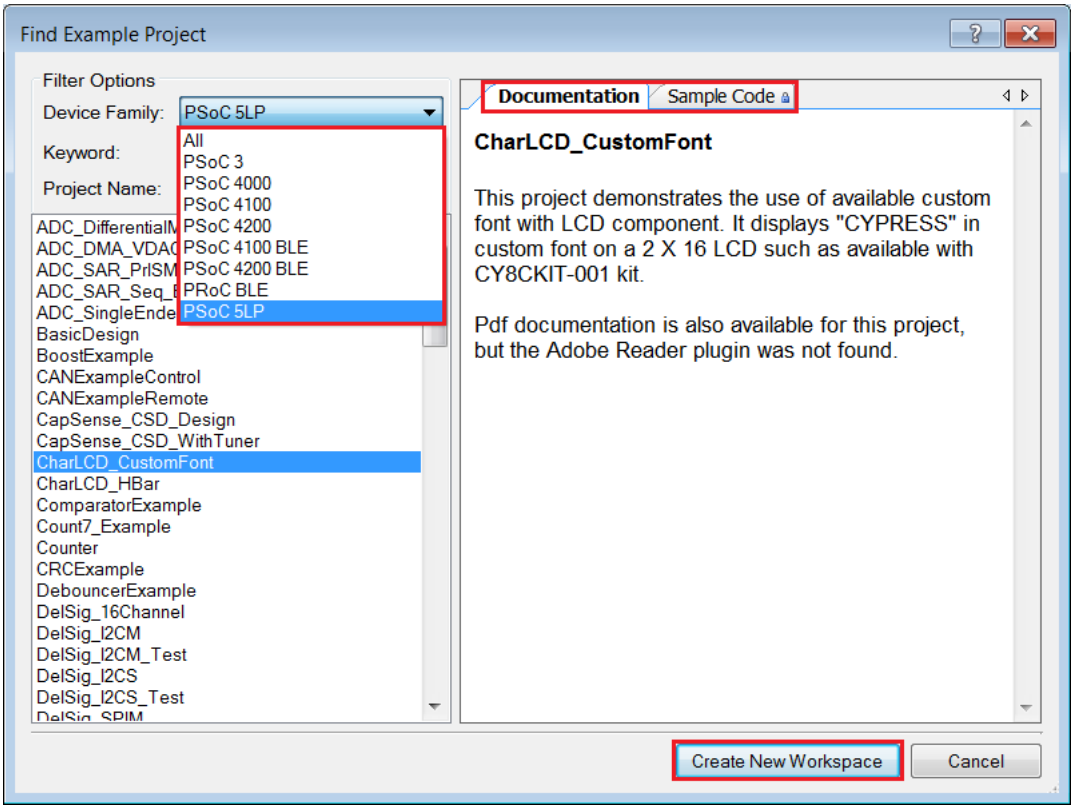

1.2.2 Kit Code Examples

This kit includes a number of code examples, which can be used to quickly evaluate the functionality of this kit. These examples are described in the Code Examples chapter on page 31.

1.2.3 PSoC Creator Help

Visit the PSoC Creator home page to download the latest version of PSoC Creator. Then, launch PSoC Creator and navigate to the following items:

- **Quick Start Guide**: Choose **Help** > **Documentation** > **Quick Start Guide**. This guide gives you the basics for developing PSoC Creator projects.
- **Simple Component example projects**: Choose **File** > **Open** > **Example projects**. These example projects demonstrate how to configure and use PSoC Creator Components.
- **Starter designs**: Choose **File** > **New** > **Project** > **PSoC 5LP Starter Designs**. These starter designs demonstrate the unique features of PSoC 5LP.
- **System Reference Guide**: Choose **Help** > **System Reference** > **System Reference Guide**. This guide lists and describes the system functions provided by PSoC Creator.
- **Component datasheets**: Right-click a Component and select **Open Datasheet**, as shown in Figure 1-5. Visit the PSoC 5LP Component Datasheets page for a list of all PSoC 5LP Component datasheets.
- **Document Manager**: PSoC Creator provides a document manager to help you to easily find and review document resources. To open the document manager, choose the menu item **Help** > **Document Manager**.

1.2.4 Component Datasheets

Right-click a Component and select **Open Datasheet** (see Figure 1-5).

Figure 1-5. Opening Component Datasheet

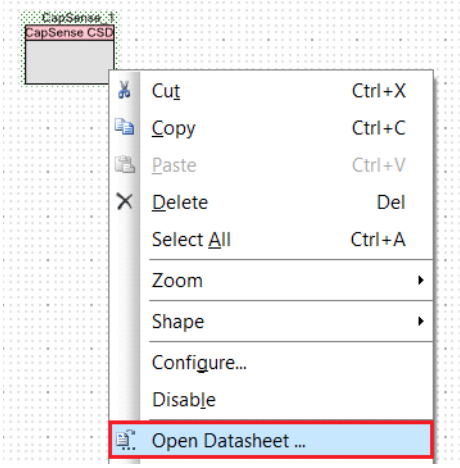

1.3 Getting Started

This guide will help you get acquainted with the PSoC 5LP Prototyping Kit:

- The Software Installation chapter on page 13 describes the installation of the kit software. This includes installation of PSoC Creator IDE for development and debugging the applications, and PSoC Programmer for programming hex files.
- The Kit Operation chapter on page 16 describes the major features of the PSoC 5LP Pioneer Kit and functionalities such as programming, debugging, and the USB-UART and USB-I2C bridges.
- The Hardware chapter on page 20 details the hardware content of the kit and the hardware operation.
- The Code Examples chapter on page 31 describes multiple PSoC 5LP code examples that will help you understand how to create your own PSoC 5LP projects.
- The Appendix on page 39 provides schematics, details about programming the kit using MiniProg3, and the bill of materials (BOM).

1.4 Additional Learning Resources

Cypress provides a wealth of information at www.cypress.com to help you to select the right PSoC device for your design, and to help you to quickly and effectively integrate the device into your design. For a comprehensive list of resources, see KBA86521, How to Design with PSoC 3, PSoC 4, and PSoC 5LP. The following is an abbreviated list for PSoC 5LP:

- Overview: PSoC Portfolio, PSoC Roadmap
- Product Selectors: PSoC 1, PSoC 3, PSoC 4, or PSoC 5LP. In addition, PSoC Creator includes a device selection tool.
- Datasheets: Describe and provide electrical specifications for the PSoC 5LP device family
- CapSense Design Guide: Learn how to design capacitive touch-sensing applications with the PSoC 5LP family of devices.
- Application Notes and Code Examples: Cover a broad range of topics, from basic to advanced level. Many of the application notes include code examples. Visit the PSoC 3/4/5 Code Examples

webpage for a list of all available PSoC Creator code examples. For accessing code examples from within PSoC Creator - see PSoC Creator Code Examples.

- Technical Reference Manuals (TRM): Provide detailed descriptions of the architecture and registers in each PSoC 5LP device family.
- Development Kits:
  - CY8CKIT-050 PSoC 5LP Development Kit enables you to evaluate, develop, and prototype high-precision analog, low-power, and low-voltage applications designed using the PSoC 5LP device family.
  - CY8CKIT-001 is a common development platform for all PSoC family devices.
  - PSoC 5LP Expansion Boards are the expansion modules designed to implement a target application.
- The MiniProg3 device provides an interface for flash programming and debug.
- Knowledge Base Articles (KBA): Provide design and application tips from experts on using the device.
- PSoC Creator Training: Visit the link www.cypress.com/go/creatorstart/creatortraining for a comprehensive list of video trainings on PSoC Creator.
- Learning From Peers: Visit www.cypress.com/forums to meet enthusiastic PSoC developers discussing the next generation embedded systems on Cypress Developer Community Forums.

1.5 Technical Support

If you have any questions, our technical support team is happy to assist you. You can create a support request on the Cypress Technical Support page.

If you are in the United States, you can talk to our technical support team by calling our toll-free number: +1-800-541-4736. Select option 3 at the prompt.

You can also use the following support resources if you need quick assistance.

- Self-help
- Local Sales Office Locations

1.6 Document Conventions

Table 1-1. Document Conventions for Guides

Convention	Usage
Courier New	Displays file locations, user entered text, and source code: `C:\...cd\icc\`
Italics	Displays file names and reference documentation: Read about the *sourcefile.hex* file in the *PSoC Creator User Guide*.
[**Bracketed, Bold**]	Displays keyboard commands in procedures: [**Enter**] or [**Ctrl**] [**C**]
File > Open	Represents menu paths: **File** > **Open** > **New Project**
Bold	Displays commands, menu paths, and icon names in procedures: Click the **File** icon and then click **Open**.
Times New Roman	Displays an equation: 2 + 2 = 4
Text in gray boxes	Describes Cautions or unique functionality of the product.

2. Software Installation

This chapter describes the steps to install the software tools and packages on a PC for using the PSoC 5LP Prototyping Kit. This includes the IDE on which the projects will be built and used for programming.

2.1 Before You Begin

All Cypress software installations require administrator privileges, but these are not required to run the software after it is installed. Close any other Cypress software that is currently running before installing the kit software.

Note: By default, the kit contents are installed in the `C:\Program Files\Cypress` folder, for a 32-bit machine and `C:\Program Files (x86)\Cypress`, for a 64-bit machine. This directory will contain the kit code examples. To open these code examples, it is recommended to use the procedure described in the Code Examples chapter on page 31. This procedure will create an editable copy of the code example in a path that you chose so that the original installed code examples will not be modified.

2.2 Install Software

Follow these steps to install the PSoC 5LP Prototyping Kit software:

1. Download the PSoC 5LP Prototyping Kit software from www.cypress.com/CY8CKIT-059. The kit software is available in three formats for download.
   a. CY8CKIT-059 Kit Setup: This installation package contains the files related to the kit including PSoC Creator, PSoC Programmer, and PDL. However, it does not include the Windows Installer or Microsoft .NET framework packages. If these packages are not on your computer, the installer will direct you to download and install them from the Internet.
   b. CY8CKIT-059 Kit Only: This executable file installs only the kit contents, which include kit code examples, hardware files, and user documents. This package can be used if all the software prerequisites (listed in step 5) are installed on your PC.
   c. CY8CKIT-059 DVD ISO: This file is a complete package, stored in a DVD-ROM image format, that you can use to create a DVD or extract using an ISO extraction program such as WinZip or WinRAR. The file can also be mounted like a virtual CD/DVD using virtual drive programs such as Virtual CloneDrive and MagicISO. This file includes all the required software, utilities, drivers, hardware files, and user documents.
2. If you have downloaded the ISO file, mount it in a virtual drive. Extract the ISO contents if you do not have a virtual drive to mount. Double-click *cyautorun.exe* in the root directory of the extracted content or mounted ISO if "Autorun from CD/DVD" is not enabled on the PC. The installation window will appear automatically. **Note:** If you are using the "Kit Setup" or "Kit Only" file, then go to step 4 for installation.

3. Click **Install CY8CKIT-059 Kit** to start the kit installation, as shown in Figure 2-1.

Figure 2-1. Kit Installer Screen

4. Select the directory in which you want to install the PSoC 5LP Prototyping Kit-related files. Choose the directory and click **Next**.
5. When you click **Next**, the PSoC 5LP Prototyping Kit installer automatically installs the required software, if it is not present on your computer. Following is the required software:
   a. PSoC Creator 4.2: This software is available for download separately from the kit at www.cypress.com/psoccreator. PSoC Creator 4.2 installer automatically installs the following additional software:
      – PSoC Programmer 3.27.1
      – Peripheral Driver Library 3.0.1.
6. Choose the **Typical/Custom/Complete** installation type in the Product Installation Overview window, as shown in Figure 2-2. Click **Next** after you select the installation type.

Figure 2-2. Product Installation Overview

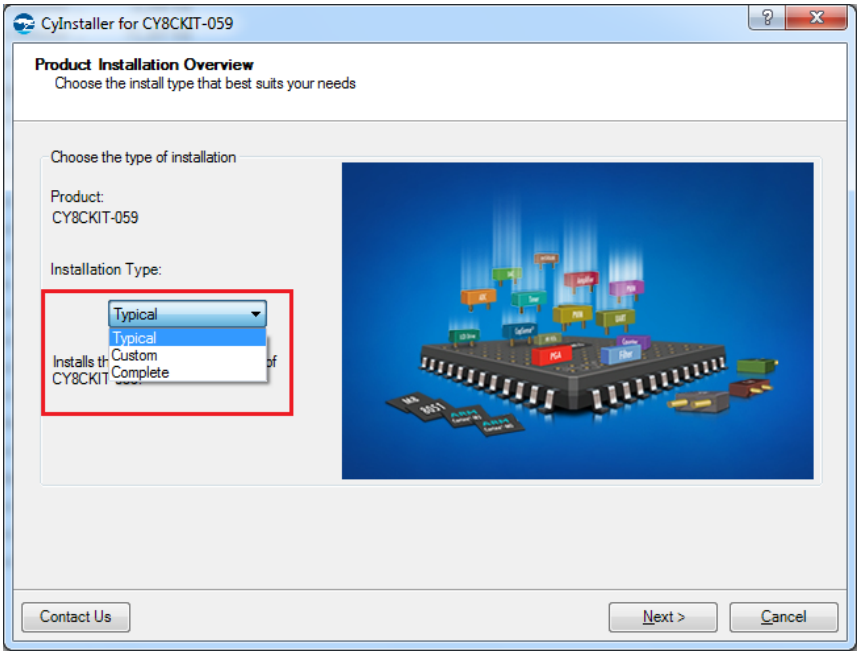

7. Read the License agreement and select 'I accept the terms in the license agreement' to continue with installation. Click **Next**.
8. When the installation begins, a list of packages appears on the installation page. A green check mark appears next to each package after successful installation.
9. Enter your contact information or select the **Continue Without Contact Information** check box. Click **Finish** to complete the PSoC 5LP Prototyping Kit installation.
10. After the installation is complete, the kit contents are available at the following location: `<Install_Directory>\CY8CKIT-059`

Default location:

Windows OS (64-bit):

`C:\Program Files (x86)\Cypress\CY8CKIT-059`

Windows OS (32-bit):

`C:\Program Files\Cypress\CY8CKIT-059`

Note: For Windows 7/8/8.1/10 users, the installed files and the folder are read-only. To use the installed code examples, follow the steps outlined in the Code Examples chapter on page 31. These steps will create an editable copy of the example in a path that you choose, so the original installed example is not modified.

2.3 Uninstall Software

The software can be uninstalled using one of the following methods:

1. Go to **Start** > **All Programs** > **Cypress** > **Cypress Update Manager** and select the **Uninstall** button.
2. Go to **Start** > **Control Panel** > **Programs and Features for Windows 7** or **Add/Remove Programs for Windows XP**; select the **Uninstall/Change** button.

3. Kit Operation

This chapter introduces you to the different features of the PSoC 5LP Prototyping Kit. This primarily includes the programming/debugging functionality, KitProg USB-UART and USB-I2C bridges, and the method to update the KitProg firmware.

3.1 Theory of Operation

Figure 3-1 shows the block diagram for the PSoC 5LP Prototyping Kit.

Figure 3-1. Block Diagram of PSoC 5LP Prototyping Kit

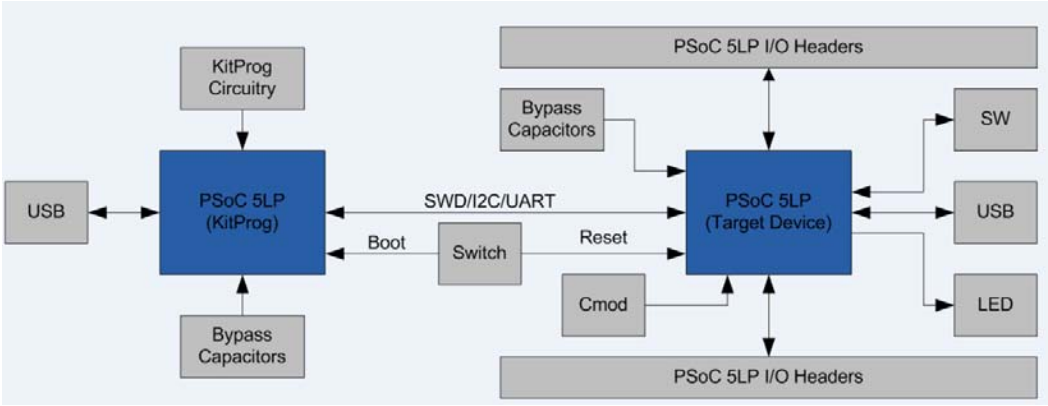

The PSoC 5LP Prototyping Kit is simplistic in design and focuses on providing you with complete access to develop applications using the PSoC 5LP device family. This kit supports the following features:

- KitProg: It is an onboard programmer/debugger, which enables programming and debugging the target PSoC 5LP device. It can also act as a USB-UART and UART-I2C bridge.
  When used as a standalone module, it can be used to program devices of the PSoC 3, PSoC 4, or PSoC 5LP families through the SWD interface. For more details on the KitProg functionality, refer to the *KitProg User Guide* in the kit installation directory:
  `<Install_Directory>\CY8CKIT-059\<version>\Documentation\KitProg_User_Guide.pdf`
- Expansion Headers: The PSoC 5LP Prototyping Kit brings all I/Os of the device to the two expansion headers, allowing you to have maximum access to the capabilities of the PSoC 5LP device.
- Micro-USB Connector: The onboard micro-USB connector provides access to the USB block of the PSoC 5LP device. This connector enables you to develop USB applications.
- User LED: The onboard LED can be used to display outputs from the PSoC 5LP device. This includes modulating the brightness of the LED to notify different states of the device.

- Push Button (SW): This kit has a push button, which can be used to provide input to the PSoC 5LP.

  Note: The switch connects the PSoC 5LP pin to ground when pressed. Therefore, you need to configure the PSoC 5LP pin as resistive pull-up to detect the switch press.
- Reset Button: This button is used for the following purposes:
  - Reset the PSoC 5LP device: When pressed, it connects the XRES line of the PSoC 5LP to ground and resets the PSoC 5LP device.
  - Bootload the KitProg: When pressed while connecting the kit's PCB USB connector to the USB port of the PC, this button puts the KitProg into the bootloader mode. For more details on the KitProg functionality, refer to the *KitProg User Guide*.

Note: When the two boards are separated, you can mount the SW2 button on the target board to reset the PSoC 5LP device using a switch.

3.2 KitProg

The KitProg is a multi-functional system, which includes a programmer, debugger, USB-I2C bridge, and a USB-UART bridge. The Cypress PSoC 5LP device is used to implement KitProg functionality. The KitProg is integrated in most PSoC development kits. For more details on the KitProg functionality, refer to the KitProg User Guide in the kit installation directory: `<Install_Directory>\CY8CKIT-059\<version>\Documentation\KitProg_User_Guide.pdf`.

3.3 Programming and Debugging the PSoC 5LP Target Device

The target PSoC 5LP device can be programmed and debugged using the KitProg. Before programming the device, ensure that PSoC Creator and PSoC Programmer software are installed on the PC. See Install Software on page 13 for more information.

3.3.1 Programming using PSoC Creator

1. Connect the kit to the computer through the PCB USB connector, J10, as shown in Figure 3-2. The kit will enumerate as a composite device, if you are plugging in the PSoC 5LP Prototyping Kit to your PC for the first time.

Figure 3-2. Connecting the PSoC 5LP Prototyping Kit to a Computer

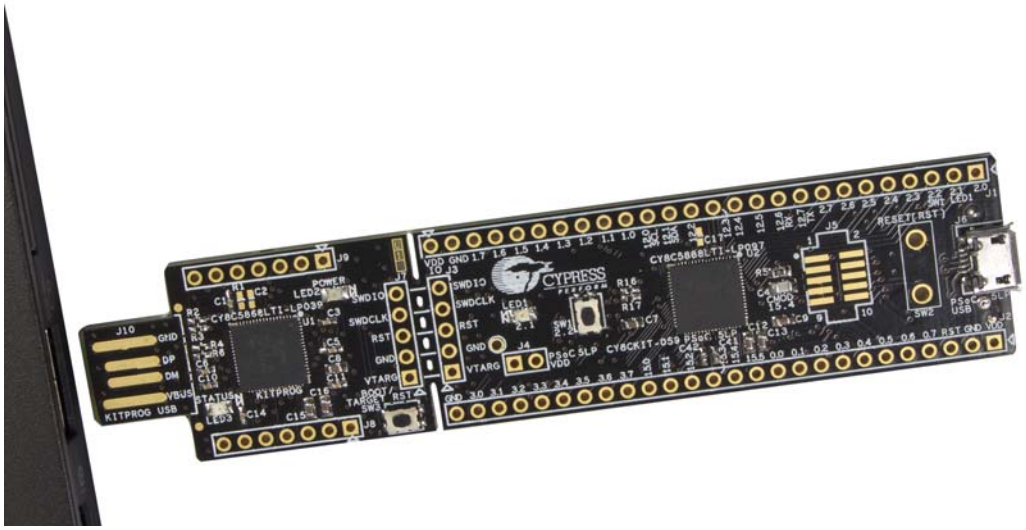

2. Open the desired project in PSoC Creator by selecting **File** > **Open** > **Project/Workspace**. This provides the option to browse to and open a previously saved project. If you want to open one of the code examples provided with the kit, follow the instructions in the Code Examples chapter on page 31.
3. Select the option **Build** > **Build Project** or press **[Shift] [F6]** to build the project as shown in Figure 3-3.

Figure 3-3. Build a Code Example

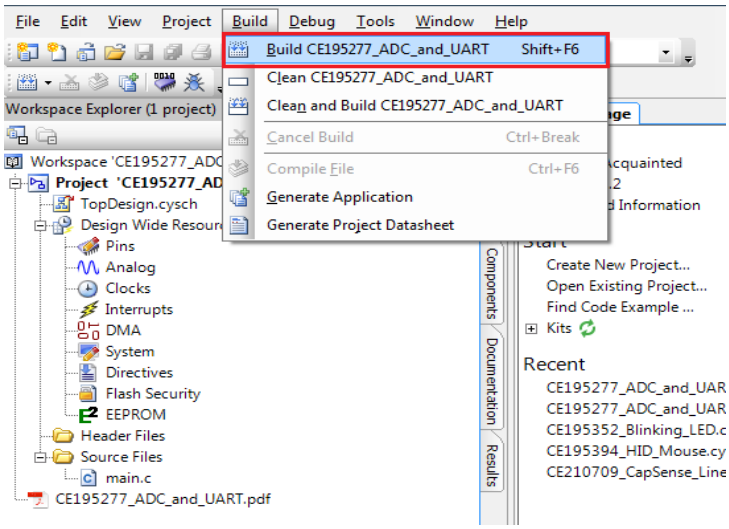

4. If there are no errors during build, program the firmware into the kit by choosing **Debug** > **Program** or press **[Ctrl] [F5]**, as shown in Figure 3-4. This programs the target PSoC 5LP device on the PSoC 5LP Prototyping Kit, and the kit is ready to use.

Figure 3-4. Programming Device From PSoC Creator

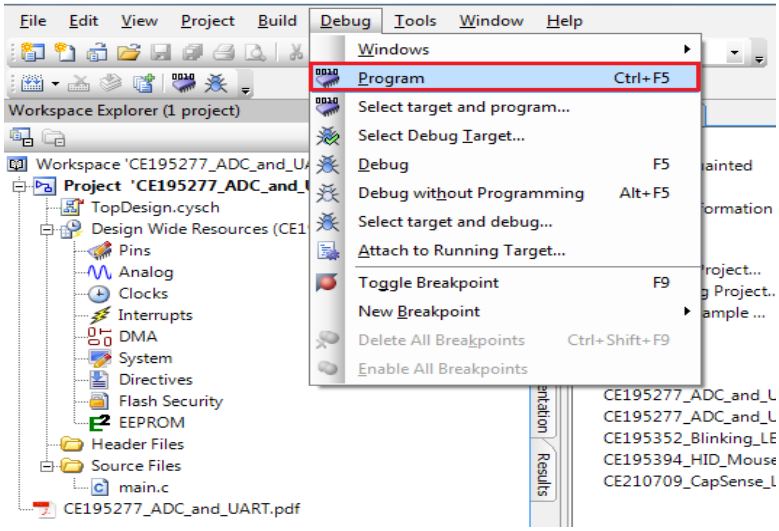

3.3.2 Debugging using PSoC Creator

To debug the project using PSoC Creator, follow steps 1 to 3 from Programming using PSoC Creator on page 17 followed by:

1. Click the **Debug** icon or press **[F5]**. Alternatively, you can use the option **Debug** > **Debug**.
2. When the PSoC Creator opens in Debug mode, use the buttons on the toolbar to debug your application.

For more details on using the debug features, refer to section 3.2 of the *KitProg User Guide*.

3.3.3 Programming using PSoC Programmer

PSoC Programmer (3.27.1 or later) can be used to program existing *.hex* files into the PSoC 5LP Prototyping Kit. Refer to section 3.3 of the *KitProg User Guide* for a detailed explanation on how to program using PSoC Programmer.

3.4 USB-UART Bridge

The KitProg on the PSoC 5LP Pioneer Kit can act as a USB-UART bridge. The UART lines between the KitProg and the target are hardwired on the board, through the snappable area, with UART_RX assigned to **P12_6** and UART_TX assigned to **P12_7** on PSoC 5LP (target). For more details on the KitProg USB-UART functionality, refer to the *KitProg User Guide*.

3.5 USB-I2C Bridge

The KitProg can function as a USB-I2C bridge and communicate with the Bridge Control Panel (BCP) software utility. The I2C lines on the PSoC 5LP (target) device are **P12_1 (SDA)** and **P12_0 (SCL)**, which are hardwired on the board to the I2C lines of the KitProg. The USB-I2C supports I2C speeds of 50 kHz, 100 kHz, 400 kHz, and 1 MHz. For more details on the KitProg USB-I2C functionality, refer to the *KitProg User Guide*.

3.6 Updating KitProg Firmware

The KitProg firmware normally does not require any update. You can use the PSoC Programmer software to update the firmware. Refer to the *KitProg Use Guide* for a detailed explanation on how to update the KitProg firmware.

4. Hardware

4.1 Board Details

The PSoC 5LP Prototyping Kit consists of the following blocks:

- PSoC 5LP device
- PSoC 5LP header ports J1 and J2
- Micro-USB connector, J6
- PSoC 5LP program/debug JTAG header, J5
- KitProg (PSoC 5LP) device
- KitProg ports J8 and J9 (GPIO)
- SWD connection J3 and J7
- PCB USB connector
- One amber LED (Power)
- One green LED (Status)
- One blue LED (User)
- User push button and reset button
- External reference capacitors (ADC Bypass)
- CapSense capacitor (CMOD)
- Programming connector, J3
- Perforated ‘snappable’ board design

Figure 4-1. PSoC 5LP Prototyping Kit Pin Details

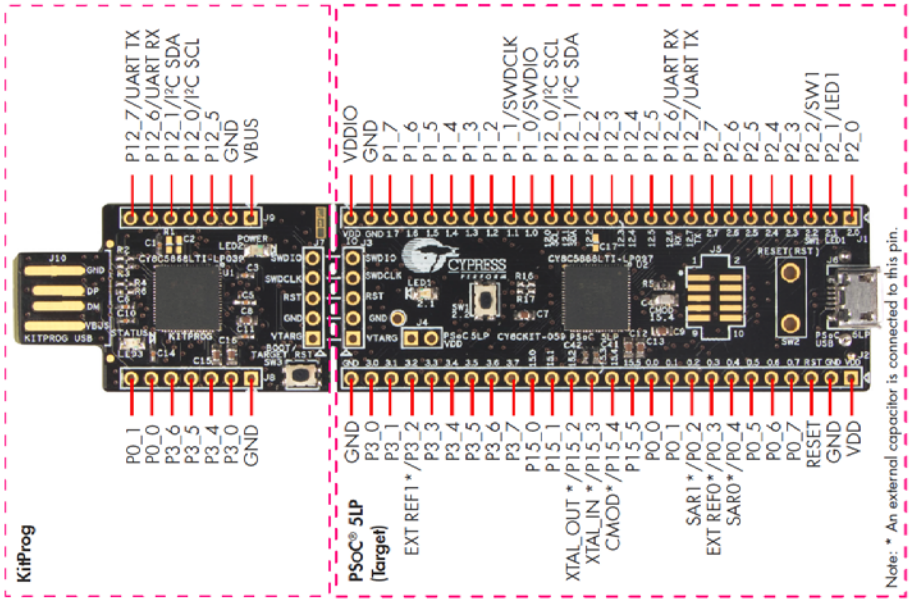

4.2 Hardware Details

4.2.1 Target Board

The target board uses the PSoC 5LP family device. PSoC 5LP is the industry's most integrated programmable SoC, integrating high-precision and programmable analog and digital peripherals, and an Arm® Cortex™-M3 CPU. The PSoC 5LP features a high-precision analog-to-digital converter (ADC), programmable amplifiers, flexible digital subsystem, unmatched parallel co-processing digital filter block (DFB), high-throughput peripherals such as DMA, CAN, and USB, and standard communication and timing peripherals. The programmable analog and digital subsystems allow flexibility and in-field tuning of the design. For more information, refer to the PSoC 5LP family datasheet in the PSoC 5LP web page.

Figure 4-2. Schematic of PSoC 5LP (Target)

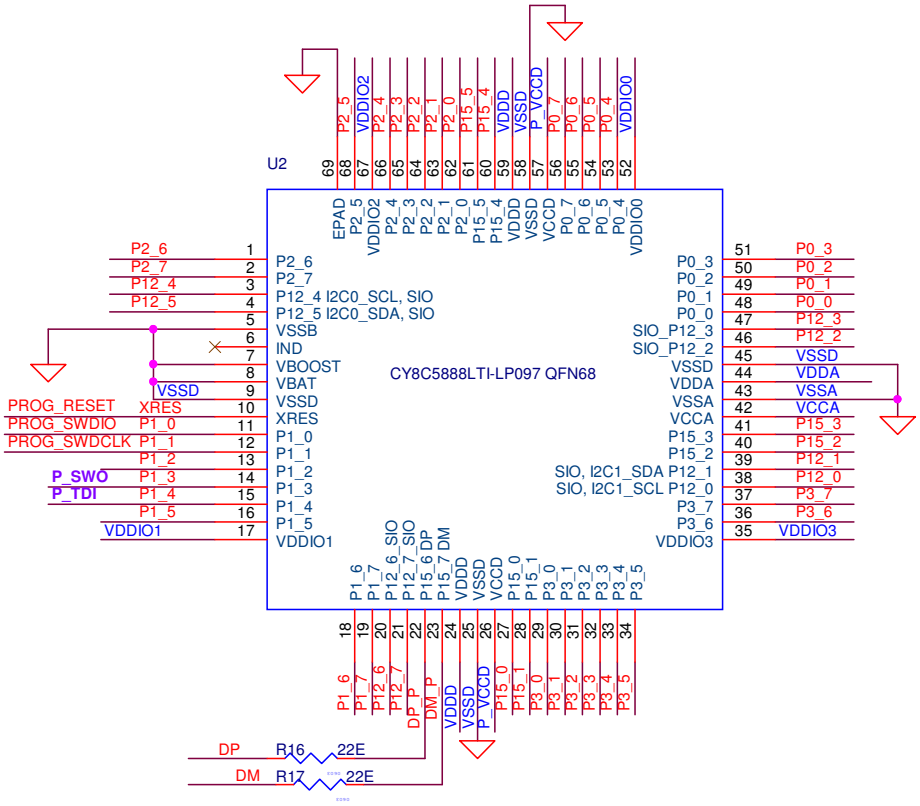

4.2.2 KitProg Board

PSoC 5LP on the KitProg board is used to program and debug the target PSoC 5LP device. The KitProg PSoC 5LP connects to the USB port of the PC through the PCB USB connector and to the SWD interface of the target PSoC 5LP device.

Figure 4-3. Schematic of PSoC 5LP (KitProg)

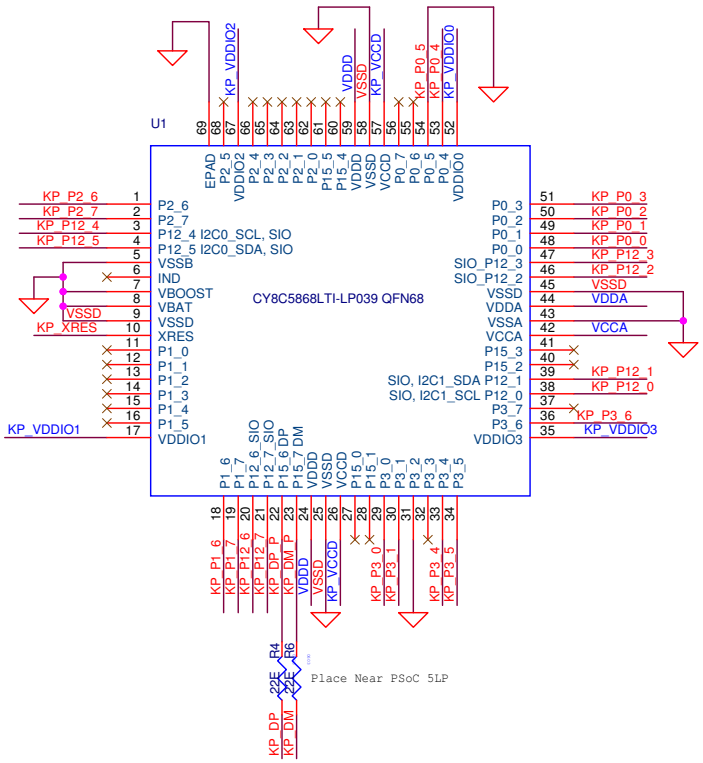

4.2.3 Power Supply System

The power supply system on this board is dependent on the source of the power. For most applications, you can use the 5-V supply from the USB connection to power the system. You can also connect an external power supply to the board for low-voltage applications. The kit supports the following connections:

- 5 V from the KitProg USB
- 5 V from the PSoC 5LP target USB (this will not power the KitProg section of the board)
- 3.3 V to 5.5 V from a regulated supply connected to VDD (this will not power the KitProg section of the board)

Note: To use an external power supply, while KitProg is connected to the PCB USB, remove diode, D1, from the board. This ensures that VTARG supply from KitProg is not supplied to the target device. KitProg measures the target voltage and adjusts the logic levels on the programming pins accordingly.

This prototyping kit does not have an onboard ESD protection circuitry. Therefore, the power source for the PSoC 5LP Prototyping Kit must be of a high quality to ensure that the board is protected from any over-current conditions and swapped-power connections.

4.2.3.1 Measure PSoC 5LP Current Consumption

You can measure the current consumption of the PSoC 5LP device by using one of these methods:

Method 1:

1. Separate the KitProg board by 'snapping' the perforated edge between the two boards.
2. Power the remaining prototyping board via any of the VDD or VTARG terminals.
3. Place an ammeter in series with the VDD or VTARG connection to measure the current consumption.

Method 2:

1. Remove the resistor R20 and install a 2-pin jumper in the supplied holes of J4.
2. Connect an ammeter across the 2-pin jumper to measure the current to the PSoC 5LP device.

This method can be used either with USB power or with power supplied to one of the VTARG pins but not when supplying to one of the VDD pins.

4.2.4 Board Separation (Snapping)

The PSoC 5LP Prototyping Kit consists of both a PSoC 5LP and a KitProg board. To separate the two boards for testing or development, break the two boards apart at the built-in perforated edge.

The easiest method of separating the two boards is to place the kit on the edge of a table, where the edge of the table is directly below the perforated edge and the smaller KitProg board is off the table edge. Press gently on the KitProg board and snap the two boards apart. If any material is removed from the edge of the boards, use sheers to clean up the edge of the kit.

Figure 4-4. PSoC 5LP Prototyping Kit Broken into Two Parts

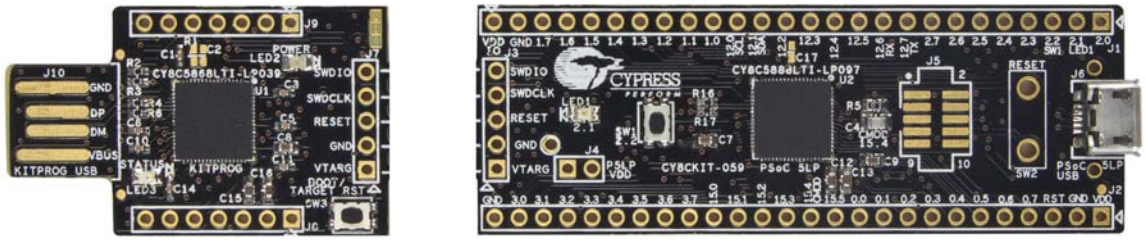

4.2.5 Header Connections

The PSoC 5LP Prototyping Kit supports a number of unpopulated headers on both the KitProg and the target PSoC 5LP boards.

4.2.5.1 Functionality of the J1 and J2 Headers (Target Board)

The target board contains two dual-inline headers (J1 and J2). These headers are both 1×26-pin headers and include all of the I/O available on the PSoC 5LP device. These headers support all of the available ports, GND, VDD, and connections to passive elements and user-input devices.

The J1 and J2 headers support 100-mil spacing, so you can solder connectors to connect the target board to any development breadboard.

Figure 4-5. J1 and J2 Headers

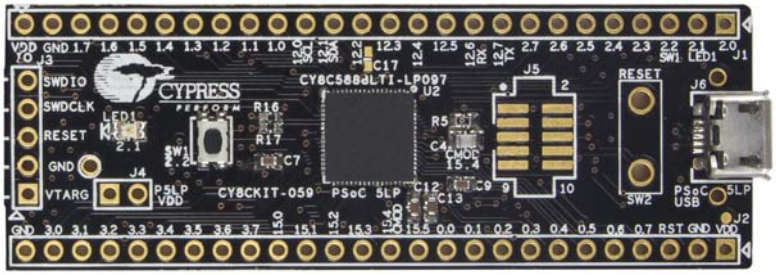

Table 4-1. J1 Header Pin Details

PSoC 5LP Prototyping Kit GPIO Header (J1)		
Pin	**Signal**	**Description**
J1_01	P2.0	GPIO
J1_02	P2.1	GPIO/LED
J1_03	P2.2	GPIO/SW
J1_04	P2.3	GPIO
J1_05	P2.4	GPIO
J1_06	P2.5	GPIO
J1_07	P2.6	GPIO
J1_08	P2.7	GPIO
J1_09	P12.7	GPIO/UART_TX
J1_10	P12.6	GPIO/UART_RX
J1_11	P12.5	GPIO
J1_12	P12.4	GPIO
J1_13	P12.3	GPIO
J1_14	P12.2	GPIO
J1_15	P12.1	GPIO/I2C_SDA
J1_16	P12.0	GPIO/I2C_SCL
J1_17	P1.0	GPIO
J1_18	P1.1	GPIO
J1_19	P1.2	GPIO
J1_20	P1.3	GPIO
J1_21	P1.4	GPIO
J1_22	P1.5	GPIO
J1_23	P1.6	GPIO
J1_24	P1.7	GPIO
J1_25	GND	Ground
J1_26	VDDIO	Power

Table 4-2. J2 Header Pin Details

PSoC 5LP Prototyping Kit GPIO Header (J2)		
Pin	**Signal**	**Description**
J2_01	VDD	Power
J2_02	GND	Ground
J2_03	RESET	Reset
J2_04	P0.7	GPIO
J2_05	P0.6	GPIO
J2_06	P0.5	GPIO
J2_07	P0.4	GPIO/BYPASS CAP
J2_08	P0.3	GPIO/BYPASS CAP
J2_09	P0.2	GPIO/BYPASS CAP
J2_10	P0.1	GPIO
J2_11	P0.0	GPIO
J2_12	P15.5	GPIO
J2_13	P15.4	GPIO/CMOD
J2_14	P15.3	GPIO/XTAL_IN
J2_15	P15.2	GPIO/XTAL_OUT
J2_16	P15.1	GPIO
J2_17	P15.0	GPIO
J2_18	P3.7	GPIO
J2_19	P3.6	GPIO
J2_20	P3.5	GPIO
J2_21	P3.4	GPIO
J2_22	P3.3	GPIO
J2_23	P3.2	GPIO/BYPASS CAP
J2_24	P3.1	GPIO
J2_25	P3.0	GPIO
J2_26	GND	Ground

4.2.5.2 *Functionality of J7 and J3 Headers (PSoC 5LP to KitProg)*

The KitProg and target boards each contain a 1x5-pin header. These headers provide a physical connection between the two devices. Specifically, the connection includes the SWD interface, required to program/debug the target PSoC 5LP device, power, ground, and reset.

Figure 4-6. J7 and J3 Headers

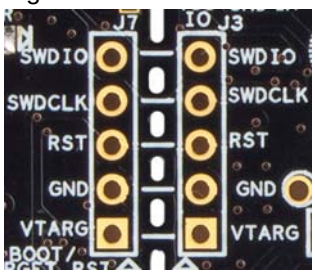

Table 4-3. Pin Details of J7 Header

PSoC 5LP to KitProg Header (J7)		
Pin	**Signal**	**Description**
J7_01	VTARG	Power
J7_02	GND	Ground
J7_03	P12.4	RESET
J7_04	P12.3	SWDCLK
J7_05	P12.2	SWDIO

Table 4-4. Pin Details of J3 Header

PSoC 5LP (Target) Program and Debug Header (J3)		
Pin	**Signal**	**Description**
J3_01	VTARG	Power
J3_02	GND	Ground
J3_03	XRES	RESET
J3_04	P1.1	SWDCLK
J3_05	P1.0	SWDIO

When the boards are separated, the KitProg board can be used to program any other PSoC 3, PSoC 4, or PSoC 5LP family of devices via J7.

4.2.5.3 *Functionality of J8 and J9 Headers (KitProg)*

The KitProg board contains two dual-inline headers (J8 and J9). These headers are both 1x7-pin-headers, used to pull out several pins of PSoC 5LP to support advanced features like a low-speed oscilloscope and a low-speed digital logic analyzer. This header also contains the KitProg bridge pins that can be used when the two boards are separated.

The J8 and J9 headers support 100-mil spacing, so you can solder connectors to connect the KitProg board to any development breadboard.

Figure 4-7. J8 and J9 Headers

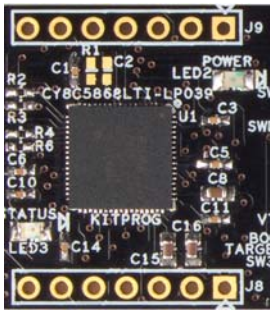

Table 4-5. Pin Details of J9

KitProg GPIO Header (J9)		
Pin	**Signal**	**Description**
J9_01	VBUS	Power
J9_02	GND	Ground
J9_03	P12.5	GPIO
J9_04	P12.0	GPIO/I2C_SCL
J9_05	P12.1	GPIO/I2C_SDA
J9_06	P12.6	GPIO/UART_RX
J9_07	P12.7	GPIO/UART_TX

Table 4-6. Pin Details of J8

KitProg GPIO Header (J8)		
Pin	**Signal**	**Description**
J8_01	GND	Ground
J8_02	P3.0	GPIO
J8_03	P3.4	GPIO
J8_04	P3.5	GPIO
J8_05	P3.6	GPIO
J8_06	P0.0	GPIO
J8_07	P0.1	GPIO

4.2.6 User and Passive Inputs

4.2.6.1 Push Button

The target PSoC 5LP board contains a single push button connected to the P2.2 pin on the PSoC 5LP device. This button can be used for general user inputs or to control different states in an application.

Figure 4-8. Push Button on the Board

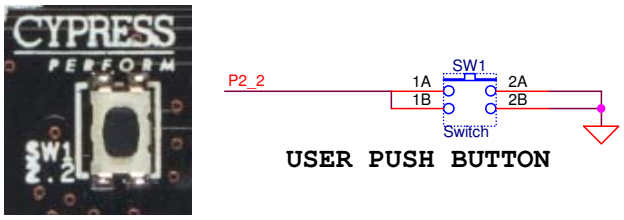

4.2.6.2 Reset/Boot Button

The KitProg board contains a push button connected to the XRES pin on the target PSoC 5LP device and P12_4 of the KitProg device. This button serves two functions:

- Reset the PSoC 5LP device: When this button is pressed, XRES line of the PSoC 5LP is connected to ground, which, in turn, resets the target device.
- Bootload the KitProg: When this button is pressed while plugging the KitProg into the USB port of the PC, the KitProg enters the bootloader mode. In this mode, bootloadable applications can be downloaded on the KitProg device.

Figure 4-9. Reset/Boot Button

Reset Button

The target board also provides a footprint for a through-hole switch, which can be used to reset the device when the two boards are separated.

Figure 4-10. Reset (RST) Button

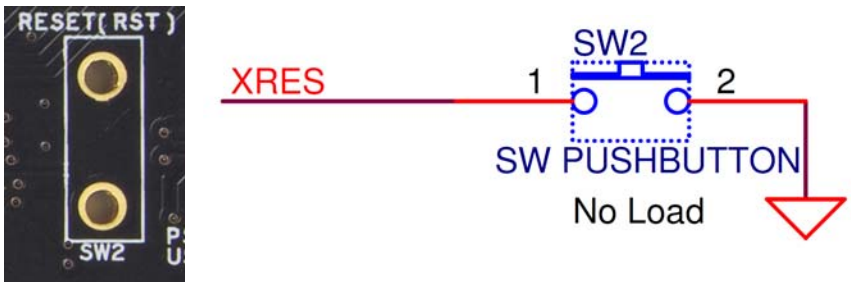

4.2.6.3 *LEDs*

The PSoC 5LP Prototyping Kit contains three LEDs:

- Amber LED: Indicates that the board is powered from the PCB USB connector. This LED will not light when the board is powered from the micro-USB connector or from VDD or VTARG directly.
- Green LED: Indicates the KitProg status, connected to P3.1 of the KitProg PSoC 5LP device. For more details on the KitProg status LED, refer to the *KitProg User Guide*.
- Blue LED: This is the user LED, connected to P2.1 of the target PSoC 5LP device.

Figure 4-11. Power LED

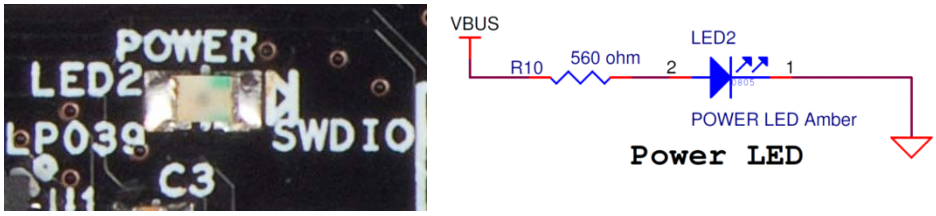

Figure 4-12. Status LED

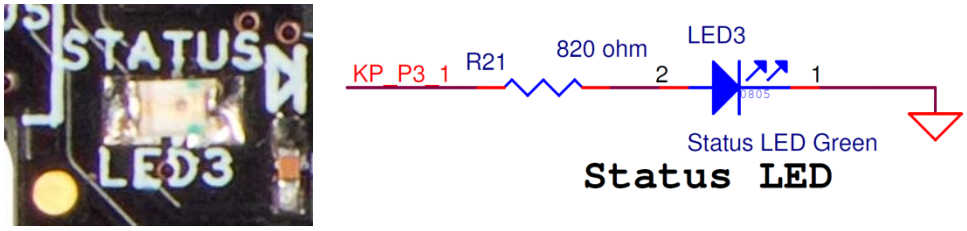

Figure 4-13. User LED

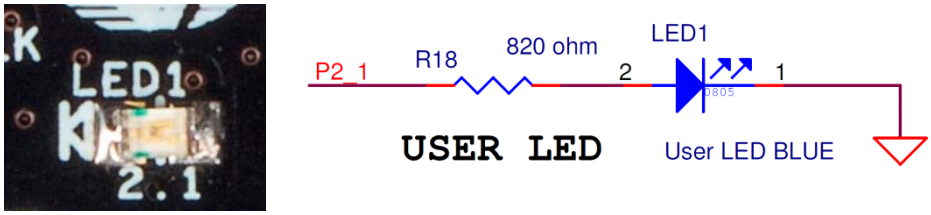

4.2.6.4 System Capacitors

The PSoC 5LP Prototyping Kit has seven capacitors, which are used when ADC operation at high frequencies, CapSense, or external 32-kHz crystal oscillator is required in the application.

- Four ADC bypass capacitors: Required for proper ADC sampling at high frequencies:
  - C9 and C12 – For two SAR ADCs
  - C7 and C13 – For Delta Sigma ADC
- A CapSense capacitor (CMOD): Required for proper CapSense functionality.
- Two biasing capacitors: Required for interfacing an external 32-kHz crystal oscillator. These capacitors are added in the Rev *A version of the PSoC 5LP Prototyping Kit.

Note: The **c**rystal oscillator is not placed on the board, it can be soldered on pins **P15_2** and **P15_3**.

Figure 4-14. System Capacitors Circuit Diagram

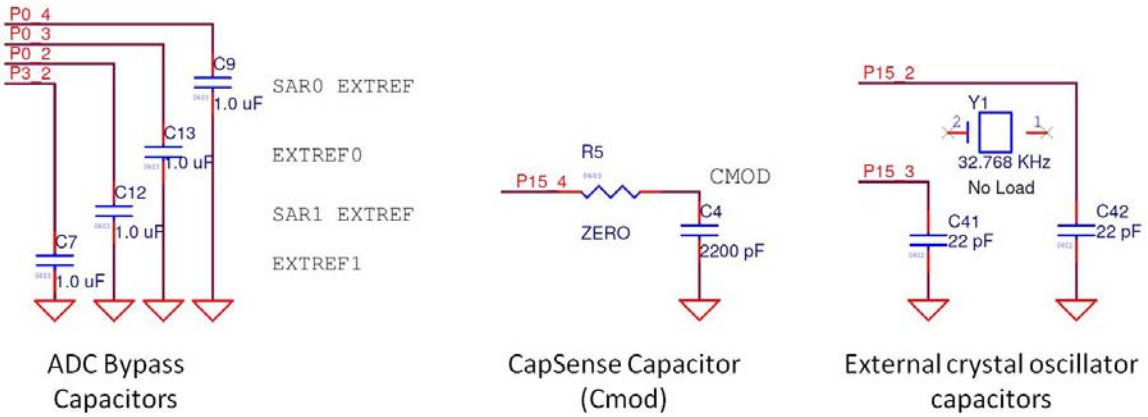

5. Code Examples

This chapter explains the code examples provided along with the PSoC 5LP Prototyping Kit. To access these code examples, download and install the CY8CKIT-059 PSoC 5LP Prototyping Kit setup file from the kit webpage: www.cypress.com/CY8CKIT-059. After installation, the code examples will be available from **Start** > **Kits** > **CY8CKIT-059** on the PSoC Creator Start Page.

5.1 Using the Kit Code Examples

Follow these steps to open and use the code examples.

1. Launch PSoC Creator from the Windows Start menu (**Start** > **All Programs** > **Cypress** > **PSoC Creator<version>** > **PSoC Creator <version>**).
2. On the Start page, click **CY8CKIT-059** under **Start** > **Kits**. A list of code examples appears, as shown in Figure 5-1.
3. Click on the desired code example and save it at a desired location. For the remaining steps, *CE195277_ADC_and_UART.cywrk* is used as reference.

Figure 5-1. Open Code Example from PSoC Creator

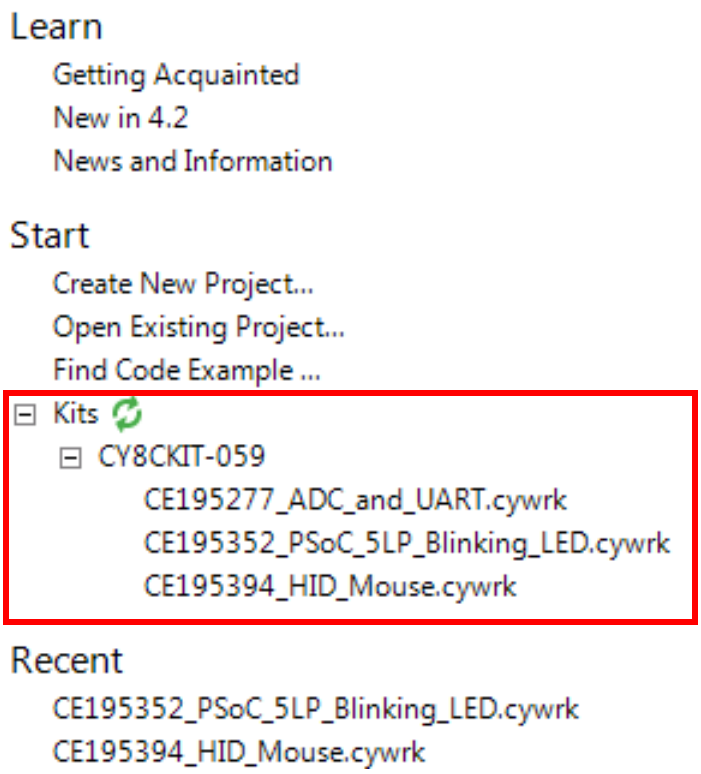

4. Build the code example by choosing **Build** > **Build <Project Name>**, as shown in Figure 5-2. A .hex file is generated after the build process.

Figure 5-2. Open Code Example from PSoC Creator

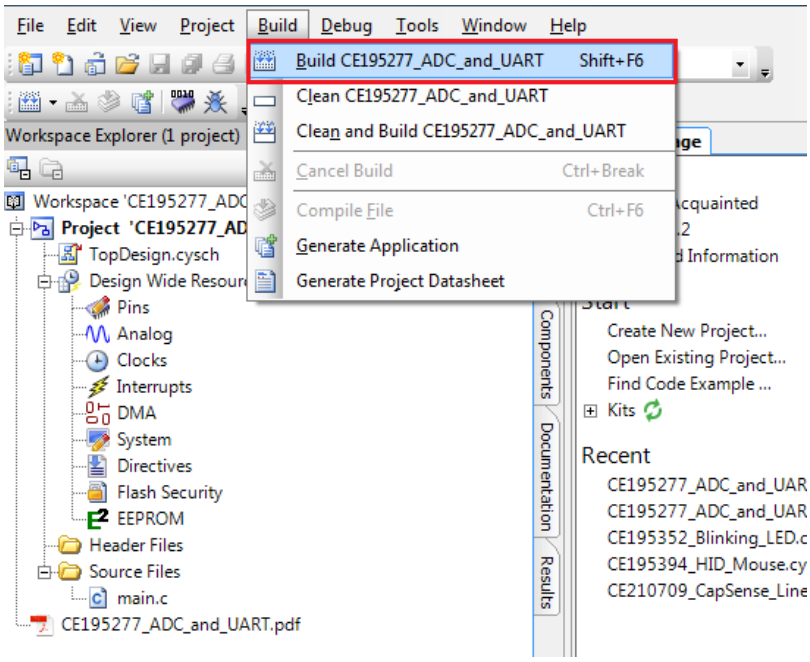

5. Connect the PSoC 5LP Prototyping Kit to the PC using the KitProg PCB USB port, J10 as described in Figure 3-2 on page 17 to program the kit with this code example.
6. Choose **Debug** > **Program** in PSoC Creator as shown in Figure 5-3.

Figure 5-3. Program Device in PSoC Creator

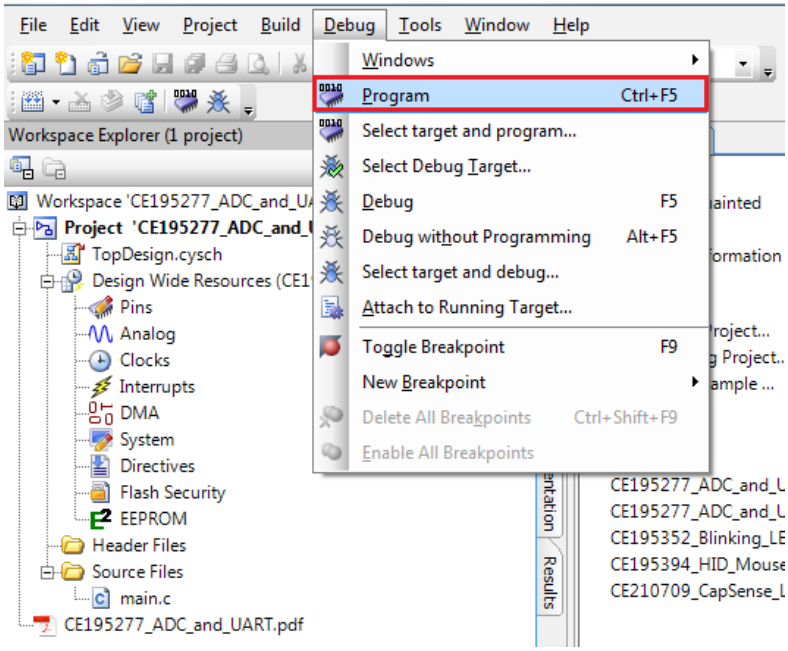

7. PSoC Creator opens the programming window if the device is not yet acquired. Select **KitProg** and click the **Port Acquire** button, as shown in Figure 5-4.

Figure 5-4. Port Acquire

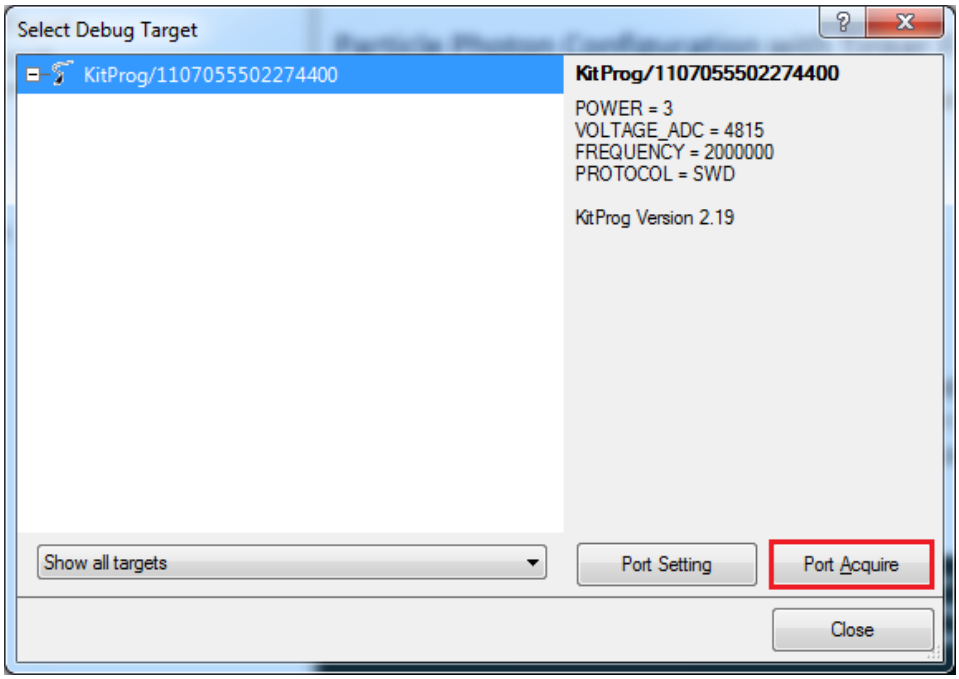

8. After the device is acquired, it is shown in a tree structure below the KitProg. Click the **Connect** button and then **OK** to exit the window and start programming, as shown in Figure 5-5.

Figure 5-5. Connect Device From PSoC Creator and Program

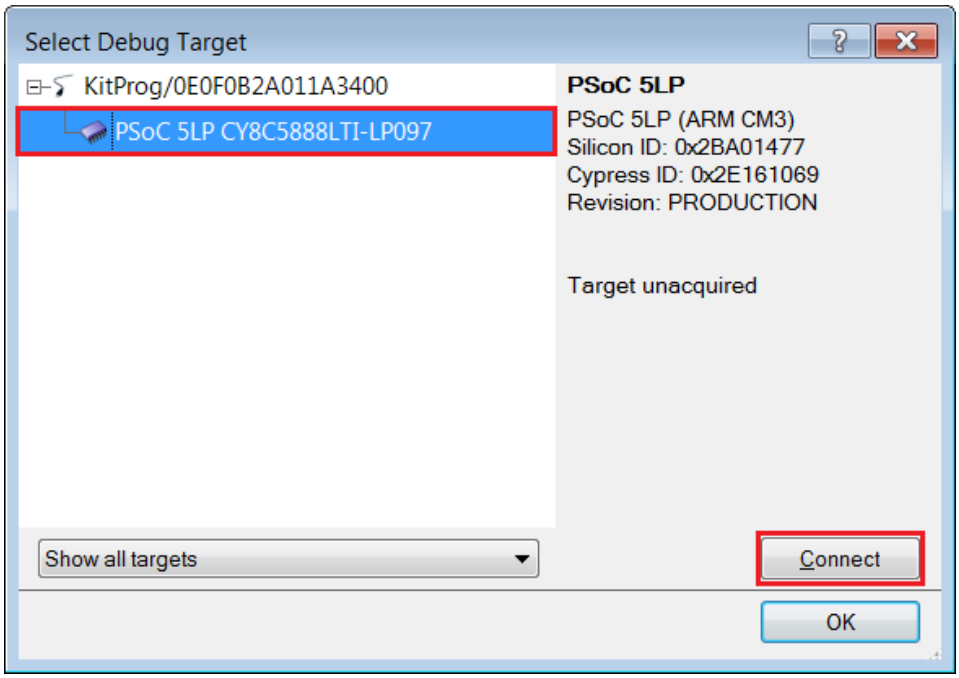

9. From the workspace explorer in PSoC Creator, open the *CE195277_ADC_and_UART.pdf* as shown in Figure 5-6.

Figure 5-6. Project Datasheet - CE195277_ADC_and_UART.pdf

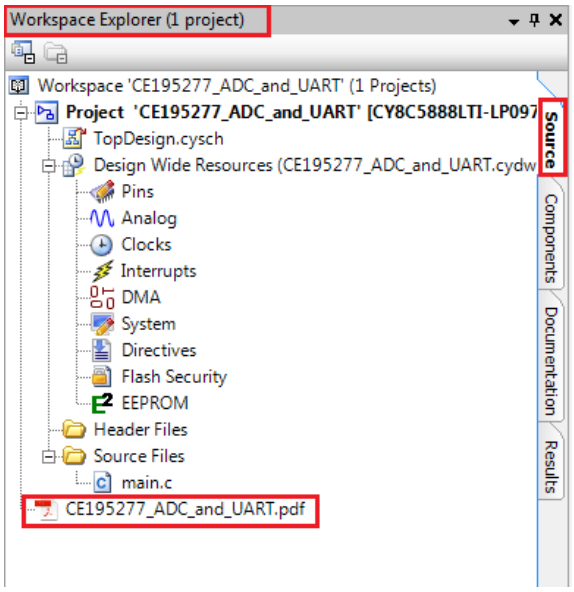

5.2 CE195352_PSoC_5LP_Blinking_LED

This code example demonstrates the use of a fixed-function PWM. The PWM is set up to output a 50-percent duty cycle digital signal with a period of 1 second. This signal can be used to drive an LED for visual testing of the PWM output. A switch is routed into the kill input of the PWM. When the switch is pressed the PWM output is shut off.

Figure 5-7. TopDesign for CE195352_PSoC_5LP_Blinking_LED

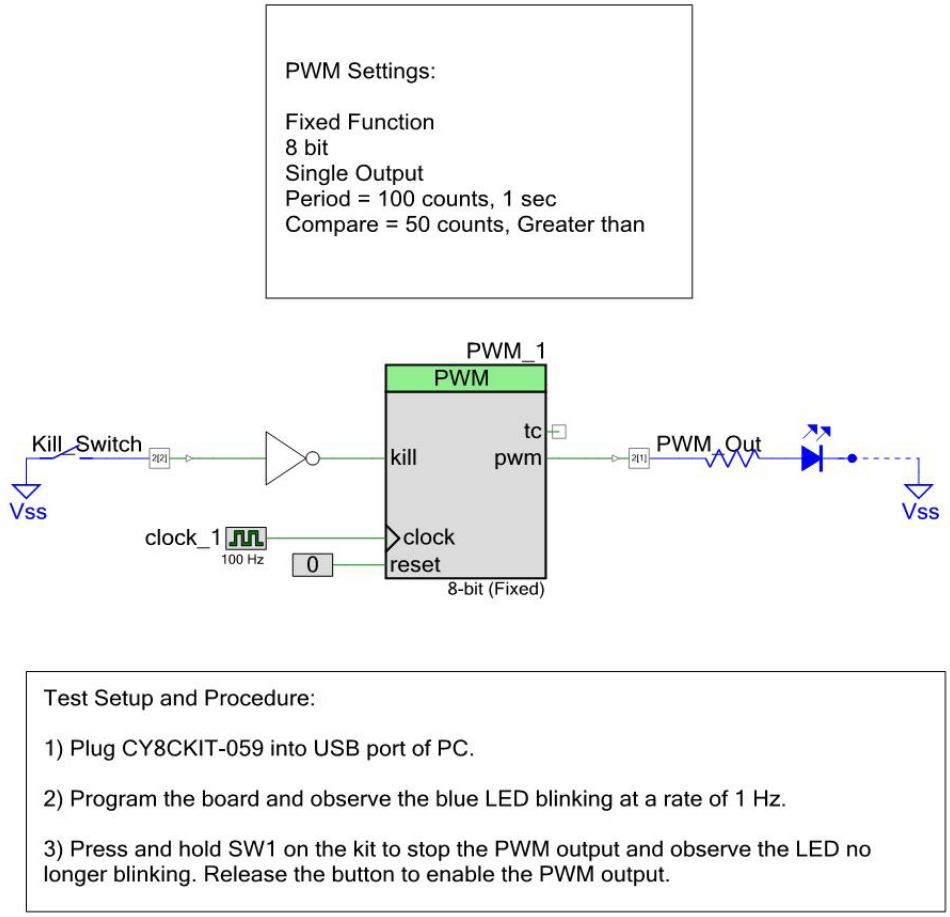

For a detailed description, refer to the *CE195352_PSoC_5LP_Blinking_LED.pdf* from PSoC Creator.

Figure 5-8. Project Datasheet - CE195352_PSoC_5LP_Blinking_LED.pdf

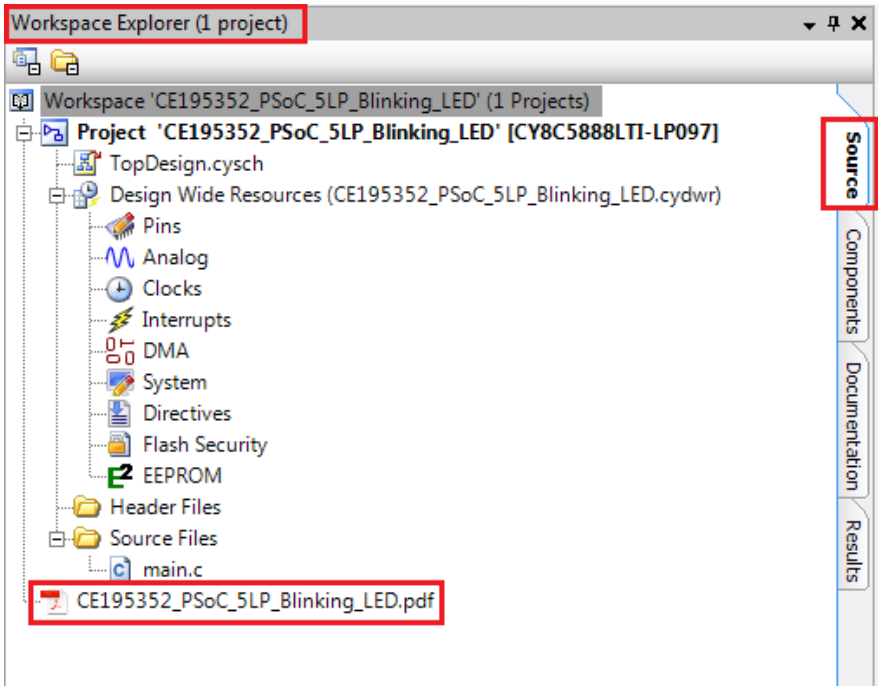

5.3 CE195277_ADC_and_UART

This code example implements a simple data collection system using the DelSig ADC and the UART component. The ADC continuously samples an analog input. The resulting samples can be sent to a PC over a UART connection a single sample at a time or continuously. Emulated data, which is just an incrementing number, can also be sent over the UART connection to test the communication. The USB-UART Bridge in the KitProg is used to create an RS-232 connection to a terminal program on a PC. The terminal program is used to send commands to get the ADC sample data and read the resulting responses.

Figure 5-9. TopDesign CE195277_ADC_and_UART

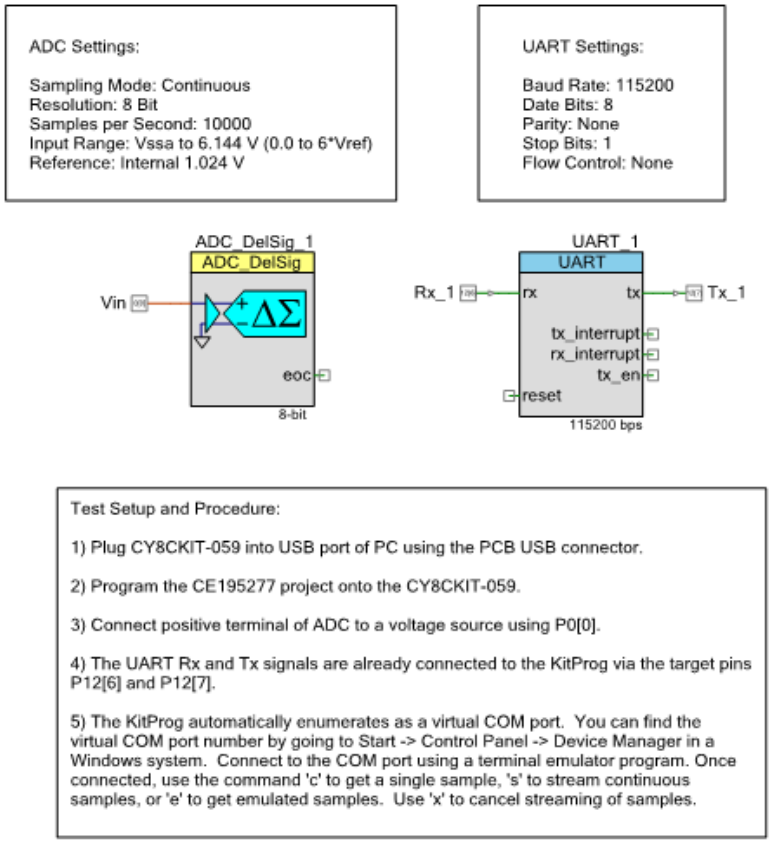

For detailed operation, refer to the *CE195277_ADC_and_UART.pdf* from PSoC Creator.

5.4 CE195394_HID_Mouse

This code example demonstrates the use of the USBFS component to implement a HID mouse. Using the standard HID mouse descriptor, the PSoC enumerates as a mouse on the PC. Once the enumeration is complete the PSoC sends data about the relative movement of the mouse to the PC. A single button is also implemented in the project to emulate the left button, or button 1, on a standard mouse. You can hold down the button on the kit and watch the cursor highlight text or select items on a desktop while it draws the box.

Figure 5-10. CE195394_HID_Mouse

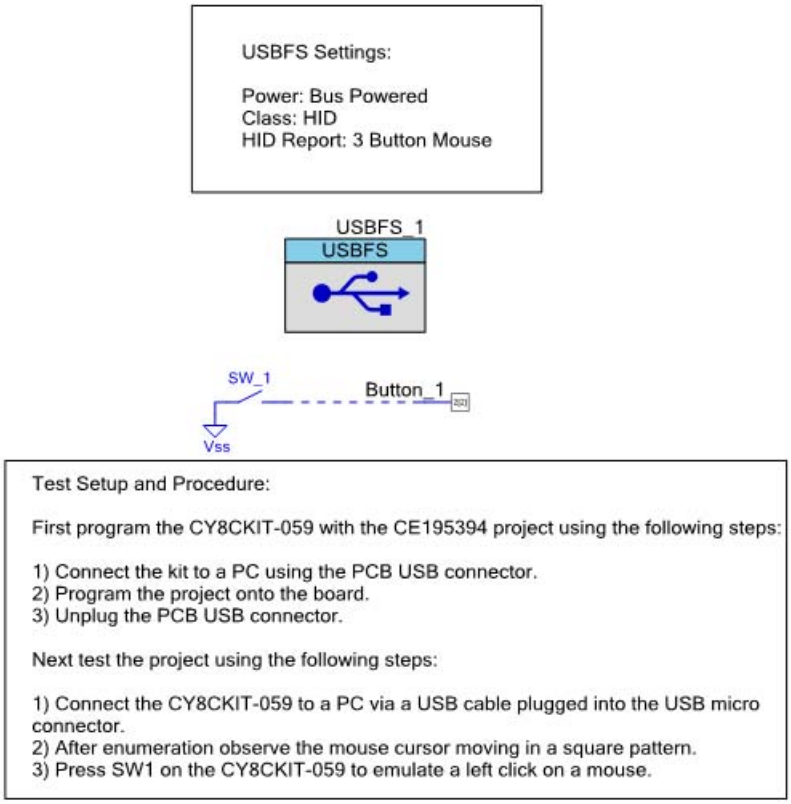

For detailed operation, refer to the *CE195394_HID_Mouse.pdf* from PSoC Creator.

A. Appendix

A.1 PSoC 5LP Prototyping Kit Schematics

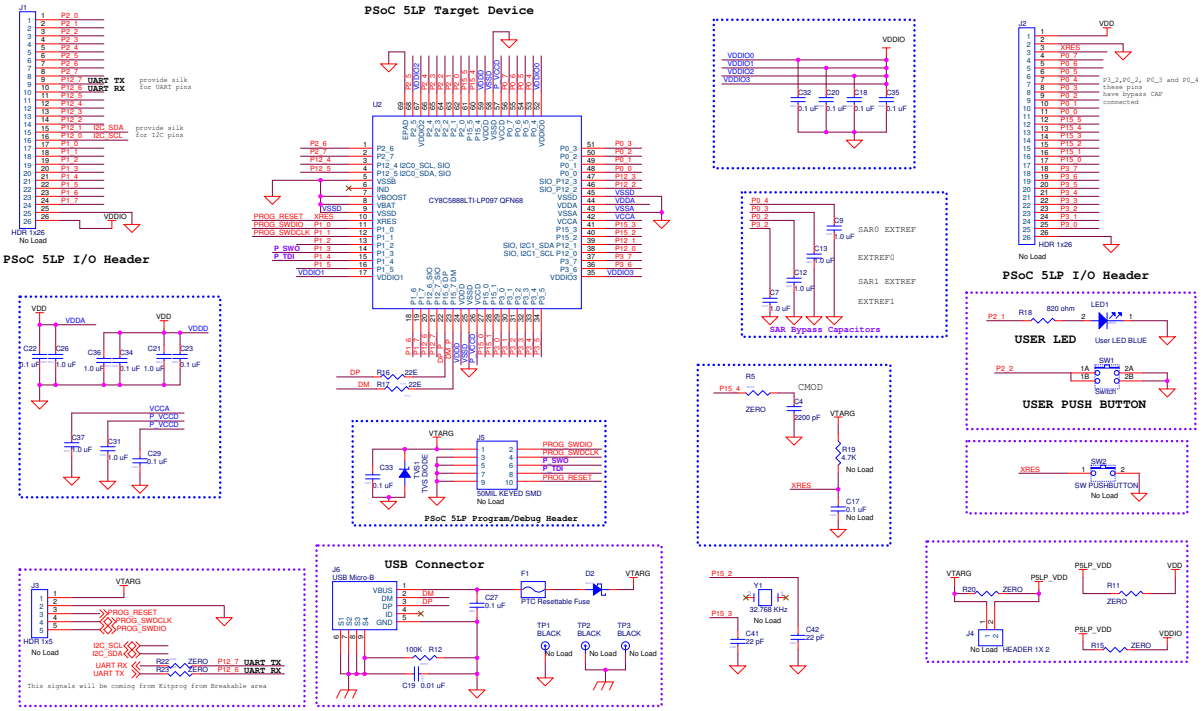

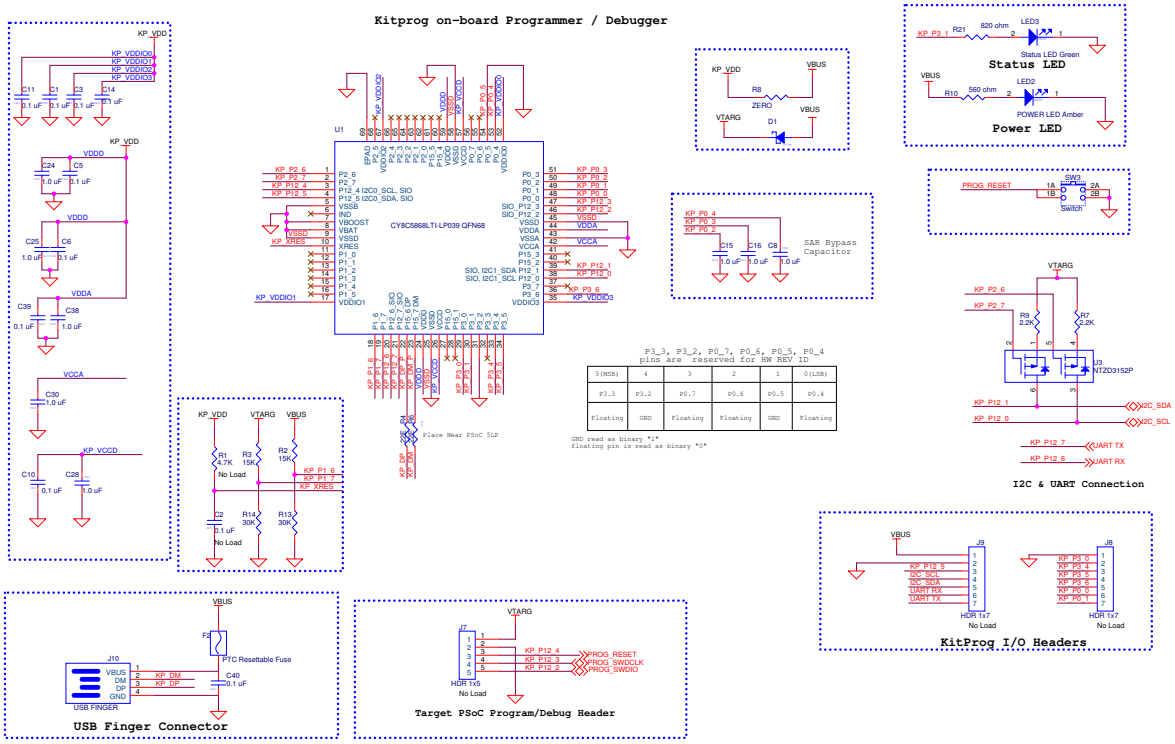
Kitprog on-board Programmer / Debugger
U1
CY8C5868LTI-LP039 QFN68
Place Near PSoC 5LP
P3_3, P3_2, P0_7, P0_6, P0_5, P0_4
pins are reserved for HW REV ID
5(MSB) 4 3 2 1 0(LSB)
P3.3 P3.2 P0.7 P0.6 P0.5 P0.4
Floating GND Floating Floating GND Floating
GND read as binary "1"
floating pin is read as binary "0"
SAR Bypass Capacitor
Status LED
Power LED
I2C & UART Connection
KitProg I/O Headers
USB Finger Connector
Target PSoC Program/Debug Header

A.2 Programming PSoC 5LP Prototyping Kit Using MiniProg3/KitProg

The target board has a provision to program the PSoC 5LP device using MiniProg3 or an external KitProg via the 5-pin SWD header or the 10-pin JTAG header. To do this, connect wires or a 5-pin 100-mil spaced header to J3 or a 10-pin JTAG header to J5 on the target board. The PSoC 5LP Prototyping Kit supports both power cycle and reset programming modes.

Figure A-1. Connecting CY8CKIT-059 to MiniProg3

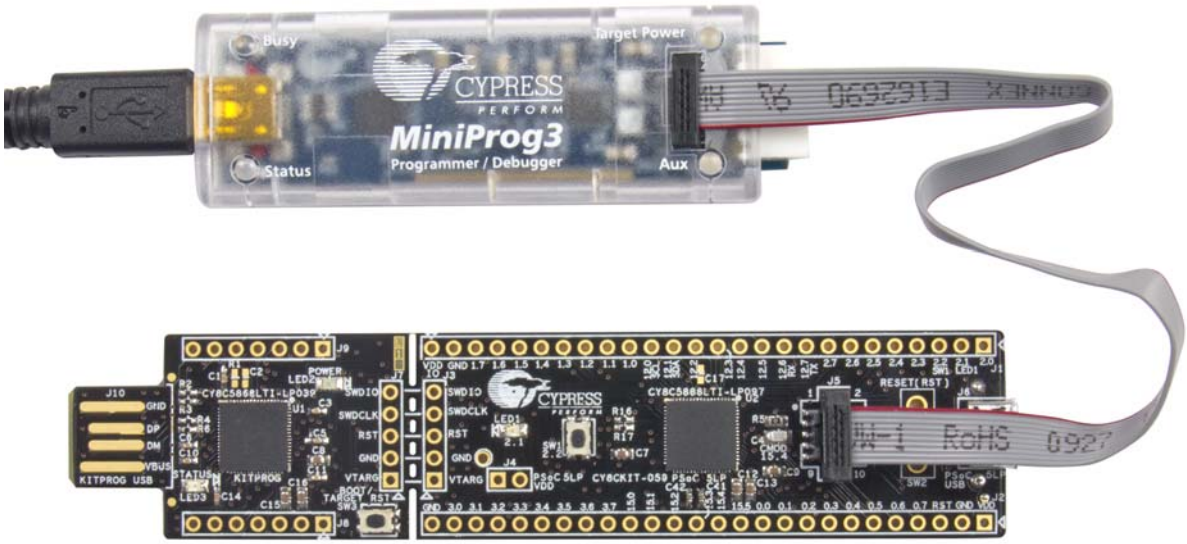

Note: CY8CKIT-002 MiniProg3 is not part of the PSoC 5LP Prototyping Kit contents and can be purchased from the Cypress Online Store.

A.3 Bill of Materials

Item	Qty	Reference	Value	Description	Mfr Name	Mfr Part Number
1	1	N/A	N/A	PCB, 108.89mm × 24.13mm, High Tg, ENIG finish, 2 layer, Color = BLACK, Silk = WHITE	Cypress Semiconductor	600-60178-01
2	19	C1, C3, C5, C6, C10, C11, C14, C18, C20, C22, C23, C27, C29, C32, C33, C34, C35, C39, C40	0.1 uF	CAP .1UF 16V CERAMIC Y5V 0402	AVX Corporation	0402YG104ZAT2A
3	1	C4	2200 pF	CAP CER 2200PF 50V 5% NP0 0805	Murata Electronics	GRM2165C1H222JA01D
4	17	C7, C8, C9, C12, C13, C15, C16, C21, C24, C25, C26, C28, C30, C31, C36, C37, C38	1.0 uF	CAP CERAMIC 1.0UF 25V X5R 0603 10%	Taiyo Yuden	TMK107BJ105KA-T
5	1	C19	0.01 uF	CAP 10000PF 16V CERAMIC 0402 SMD	TDK Corporation	C1005X7R1C103K050BA
6	2	C41, C42	22 pF	CAP CER 22PF 50V 2% C0G 0402	TDK Corporation	C1005C0G1H220G050BA
7	2	D1, D2	MBR0520L	DIODE, SCHOTTKY, 20V, 0.5A, 400mW, SOD-123	Fairchild Semiconductor	MBR0520L
8	2	F1, F2	PTC Resettable Fuse	FUSE, PTC Resettable, 0.50A, 16V, 1210, SMD	Bel Fuse Inc	0ZCH0050FF2G
9	1	J6	USB Micro-B	CONN RCPT STD MICRO USB TYPE B	FCI	10103594-0001LF
10	1	LED1	User LED BLUE	LED, BLUE, CLEAR, 0805, SMD	Lite-On Inc	LTST-C170TBKT
11	1	LED2	POWER LED Amber	LED 595NM AMB DIFF 0805 SMD	Avago Technologies US Inc.	HSMA-C170
12	1	LED3	Status LED Green	LED GREEN CLEAR 0805 SMD	Chicago Miniature/ Visual Communications Company-VCC	CMD17-21VGC/TR8
13	2	R2, R3	15K	RES SMD 15K OHM 5% 1/10W 0402	Panasonic - ECG	ERJ-2GEJ153X
14	4	R4, R6, R16, R17	22E	RES, 22 OHM, 1%, 100PPM, 1/16W, 0402	Panasonic - ECG	ERJ-2RKF22R0X

Item	Qty	Reference	Value	Description	Mfr Name	Mfr Part Number
15	3	R5, R22, R23	ZERO	RES SMD 0.0 OHM JUMPER 06O3 1/10W	Panasonic - ECG	ERJ-3GEY0R00V
16	2	R7, R9	2.2K	RES 2.2K OHM 1/10W 5% 0603 SMD	Panasonic - ECG	ERJ-3GEYJ222V
17	1	R10	560 ohm	RES, 560 OHM, 5%, 200PPM, 1/10W, 0603, SMD	Panasonic - ECG	ERJ-3GEYJ561V
18	1	R12	100K	RES 100K OHM 1/10W 5% 0402 SMD	Panasonic - ECG	ERJ-2GEJ104X
19	2	R13, R14	30K	RES SMD 30K OHM 5% 1/10W 0402	Panasonic - ECG	ERJ-2GEJ303X
20	4	R8, R11, R15, R20	ZERO	RES SMD 0.0 OHM JUMPER 1/8W 0805	Panasonic - ECG	ERJ-6GEY0R00V
21	2	R18, R21	820 ohm	RES, 820 OHM, 5%, 1/10W, 0603	Panasonic - ECG	ERJ-3GEYJ821V
22	2	SW1, SW3	Switch	SW, TACTILE SWITCH, SPST-NO, 0.05A, 32V	C&K Components	KMR221GLFS
23	1	TVS1	TVS DIODE	DIODE, TVS, 5V, 350W, SOD-323	Semtech	SD05.TCT
24	1	U1	CY8C5868LTI -LP039 QFN68	PSoC 5LP CYC58LP, 67 MHz	Cypress Semiconductor	CY8C5868LTI-LP039
25	1	U2	CY8C5888LTI -LP097 QFN68	PSoC 5LP CYC58LP, 80 MHz	Cypress Semiconductor	CY8C5888LTI-LP097
26	1	U3	NTZD3152P	FET DUAL P-CH 20V 430mA SOT-563	ON Semiconductor	NTZD3152PT1G
No Load Components						
1	2	C2, C17	0.1 uF	CAP .1UF 16V CERAMIC Y5V 0402	AVX Corporation	0402YG104ZAT2A
2	2	J1, J2	HDR 1x26	CONN HDR BRKWAY 26POS VERT 2.54mm,15AU, TH	TE Connectivity	2-104427-4
3	2	J3, J7	HDR 1x5	CONN HEADER 5POS .100 VERT TIN	Molex	22-23-2051
4	1	J4	HDR 1x2	CONN HEADR BRKWAY .100 02POS STR	TE Connectivity	9-146280-0-02
5	1	J5	50MIL KEYED SMD	CONN, HEADER, MALE, 1.27mm, 10POS, GOLD, SMD	Samtec Inc	FTSH-105-01-L-DV-K
6	2	J8, J9	HDR 1x7	CONN HEADER FEMALE 7POS .1" GOLD	Sullins Connector Solutions	PPPC071LFBN-RC
7	2	R1, R19	4.7K	RES SMD 4.7K OHM 5% 1/ 10W 0402	Panasonic - ECG	ERJ-2GEJ472X
8	1	SW2	SW PUSH-BUTTON	SWITCH TACTILE SPST-NO 0.05A 12V	C&K Components	PTS635SL50 LFS

Item	Qty	Reference	Value	Description	Mfr Name	Mfr Part Number
9	3	TP1, TP2, TP3	BLACK	TP, TEST POINT, 0.040"D, BLACK, TH	Keystone Electronics	5000
10	1	Y1	BLACK	CRYSTAL 32.768KHZ 12.5PF THRU	Citizen Finetech Miyota	CFS308-32.768KDZF-UB
Label						
38	1	N/A		LBL, PCA Label, Vendor Code, Datecode, Serial Number 121-60210-01 REV 01 (YYWWVVXXXXX)	Cypress Semiconductor	
39	1	N/A		LBL, PCBA Anti-Static Warning, 10mm × 10mm	Cypress Semiconductor	

Revision History

CY8CKIT-059 PSoC® 5LP Prototyping Kit Guide Revision History

Document Title: CY8CKIT-059 PSoC® 5LP Prototyping Kit Guide Document Number: 001-96498				
Revision	**ECN**	**Issue Date**	**Origin of Change**	**Description of Change**
**	4668422	02/23/2015	PMAD	New kit guide
*A	4710488	04/02/2015	PMAD	Updated Introduction chapter on page 7: Updated description. Updated "PSoC Creator" on page 8: Updated "PSoC Creator Code Examples" on page 9: Updated description. Added "Kit Code Examples" on page 10. Updated Software Installation chapter on page 13: Updated "Before You Begin" on page 13: Updated description. Updated "Install Software" on page 13: Updated description. Updated Kit Operation chapter on page 16: Updated "Theory of Operation" on page 16: Updated description. Updated Figure 3-1. Updated "KitProg" on page 17: Updated description. Removed "KitProg USB Connection". Updated "Programming and Debugging the PSoC 5LP Target Device" on page 17: Updated "Programming using PSoC Creator" on page 17: Updated description. Updated "Programming using PSoC Programmer" on page 19: Updated description. Updated "USB-UART Bridge" on page 19: Updated description. Removed table "Specifications Supported by USB-UART Bridge". Updated "USB-I2C Bridge" on page 19: Updated description. Removed figure "KitProg USB-I2C Connected in Bridge Control Panel". Updated "Updating KitProg Firmware" on page 19: Updated description. Removed figure "KitProg Firmware Update Warning". Removed figure "Upgrade Firmware Message in PSoC Programmer". Removed figure "Firmware Updated in PSoC Programmer".

CY8CKIT-059 PSoC® 5LP Prototyping Kit Guide Revision History *(continued)*

Document Title: CY8CKIT-059 PSoC® 5LP Prototyping Kit Guide Document Number: 001-96498				
Revision	**ECN**	**Issue Date**	**Origin of Change**	**Description of Change**
*A (cont.)	4710488	04/02/2015	PMAD	Updated Hardware chapter on page 20: Updated "Board Details" on page 20: Updated Figure 4-1. Updated "Hardware Details" on page 21: Updated "Power Supply System" on page 23: Updated description. Updated "Header Connections" on page 24: Updated "Functionality of the J1 and J2 Headers (Target Board)" on page 24: Updated Table 4-2. Updated "User and Passive Inputs" on page 28: Updated "Push Button" on page 28: Updated Figure 4-8. Removed figure "Push Button Schematic". Updated Figure 4-14. Updated "LEDs" on page 29: Updated description. Updated "System Capacitors" on page 30: Updated description. Updated Figure 4-14. Updated Code Examples chapter on page 31: Updated "CE195352_Blinking_LED" on page 35: Updated Figure 5-7. Updated "CE195277_ADC_and_UART" on page 37: Updated description. Updated Figure 5-9. Updated "CE195394_HID_Mouse" on page 38: Updated description. Updated Figure 5-10. Updated Appendix chapter on page 39: Updated "Programming PSoC 5LP Prototyping Kit Using MiniProg3/KitProg" on page 41: Updated Figure A-1. Updated "Bill of Materials" on page 42: Added Item 10 under "No Load Components". Added "Label" and added corresponding items under the same.
*B	4866765	07/30/2015	VRNK	Updated Hardware chapter on page 20: Updated "Hardware Details" on page 21: Updated "Header Connections" on page 24: Updated "Functionality of the J1 and J2 Headers (Target Board)" on page 24: Updated Table 4-2: Added "/BYPASS CAP" in the "Description" column corresponding to pins P0.4 and P3.2. Remove "/BYPASS CAP" in the "Description" column corresponding to pin P3.3.
*C	4891134	08/20/2015	SHIB	Updated Appendix chapter on page 39: Updated "Bill of Materials" on page 42: Updated Item 10 under "No Load Components".
*D	5740232	05/17/2017	AESATMP8	Updated logo and Copyright.

CY8CKIT-059 PSoC® 5LP Prototyping Kit Guide Revision History *(continued)*

Document Title: CY8CKIT-059 PSoC® 5LP Prototyping Kit Guide Document Number: 001-96498				
Revision	**ECN**	**Issue Date**	**Origin of Change**	**Description of Change**
*E	6041084	01/22/2018	SAGA / GRSK	Updated Introduction chapter on page 7: Updated "PSoC Creator" on page 8: Updated "PSoC Creator Code Examples" on page 9: Updated Figure 1-3. Updated "Getting Started" on page 11: Updated description. Updated "Additional Learning Resources" on page 11: Updated hyperlinks. Updated Software Installation chapter on page 13: Updated "Install Software" on page 13: Updated description. Updated Figure 2-1, and Figure 2-2. Updated Kit Operation chapter on page 16: Updated "Theory of Operation" on page 16: Updated description. Updated "Programming and Debugging the PSoC 5LP Target Device" on page 17: Updated "Debugging using PSoC Creator" on page 19: Updated description. Updated Hardware chapter on page 20: Updated "Hardware Details" on page 21: Updated "Header Connections" on page 24: Updated "Functionality of J7 and J3 Headers (PSoC 5LP to KitProg)" on page 26: Updated Table 4-3, and Table 4-4. Updated "Functionality of J8 and J9 Headers (KitProg)" on page 27: Updated Table 4-5, and Table 4-6. Updated Code Examples chapter on page 31: Updated "Using the Kit Code Examples" on page 31: Updated description. Updated Figure 5-1, Figure 5-2, Figure 5-3, Figure 5-4, and Figure 5-6. Updated "CE195352_Blinking_LED" on page 35: Updated description. Updated Figure 5-8. Updated "CE195277_ADC_and_UART" on page 37: Updated description. Updated Figure 5-9. Updated "CE195394_HID_Mouse" on page 38: Updated description. Updated Figure 5-10. Updated Appendix chapter on page 39: Updated "PSoC 5LP Prototyping Kit Schematics" on page 39: Updated all figures. Updated "Bill of Materials" on page 42: Updated entire table. Completing Sunset Review.
*F	6077263	02/21/2018	SAGA	Updated Software Installation chapter on page 13: Updated "Install Software" on page 13: Updated description. Updated Kit Operation chapter on page 16: Updated "Programming and Debugging the PSoC 5LP Target Device" on page 17: Updated "Programming using PSoC Programmer" on page 19: Updated description.

CY8CKIT-059 PSoC® 5LP Prototyping Kit Guide Revision History *(continued)*

Document Title: CY8CKIT-059 PSoC® 5LP Prototyping Kit Guide Document Number: 001-96498				
Revision	**ECN**	**Issue Date**	**Origin of Change**	**Description of Change**
*G	6095702	03/12/2018	SAGA	Updated the code example title in Section 5.2. Updated Figure 5.1 and Figure 5-8.